SAMEDI 29 GAME 8

FRAME

Game, 6061 T4-T6 Alloy, w/160mm travel, Bosch PowerTube battery integration (horizontal), 12x148mm, Boost & smart Flip-Chip for geometry adjust, w/bashguard & chainguide

FORK

FOX, Float 38 Factory, GRIP2 w/HSC/LSC/HSR/LSR, Kashima coated, 170mm travel, 15x110mm Boost, 44mm Offset Mini-fender compatible

REAR SHOCK

Moustache, Magic Grip Control 160, specific Air Shock with 2-position platform and dynamic control of rebound, Trunion mount, build-in 205x65mm, 160mm travel

MOTOR

Bosch Performance Line CX motor - 85Nm torque available on a wide range of speeds. Optimized eMTB mode, extended boost function - Compact, lightweight, minimal resistance to pedalling and extreme responsiveness 250W rated power, Max 600W. Assistance up to 340%

BATTERY

Bosch, PowerTube 625Wh

BATTERY RANGE

Up to 105jm. Estimate your ebike battery range

CHARGER

Bosch, 4Ah

DISPLAY

Bosch Purion - 5 modes (Eco, Tour, eMTB, Turbo, Off) - « Walk assist »

REAR DERAILLEUR

Shimano, XT, RD-M8100-SGS, 12-speed

FRONT COG / CHAINRING

e*thirteen, forged aluminum, 34 teeth Narrow wide, direct mount fix

CASSETTE

Shimano, SLX, CS-M7100-12S, 10-51T

CHAIN

Shimano, CN-M6100, 12-speed

SHIFTERS

Shimano, SLX, SL-M7100-R, 12-speed, Rapidfire Plus

CRANKSET

FSA, forged + CNC Alloy, 165mm

BRAKES

Shimano, hydraulic XT BR-M8120 4 piston disc brakes front & rear

ROTORS FRONT/REAR (IN MM)

Shimano, 203mm front & rear

HUBS

Front = Shimano XT, 28 holes, Centerlock, 15x110mm thru axle Rear = Shimano XT, 28 holes, Centerlock, Microspline 12 speed, 12x148mm thru axle

RIMS

Moustache asymmetric, Alloy 6061E, welded, double wall, 28 holes, 29", 31mm width, mounted with Tubeless valves & flap Triple thickness spokes, aluminum locking nuts

TIRES

Maxxis Assegai 29x2.50, foldable, TLR EXO (Tubeless Ready)

SADDLE

Moustache, Ergonomic

SEATPOST

KS-Ragei, dropper-post w/Shimano remote lever, 31.6mm Size S= 31,6 w/125mm travel Size M= 31,6 w/150mm travel Size L= 31,6 w/170mm travel Size XL= 31,6 w/170mm travel

SEAT CLAMP

Moustache, Alloy 34.9mm

HANDLEBAR

Moustache, Alloy 780mm, 15mm rise, 9° backsweep, 4° upsweep

STEM

Moustache, Alloy 3D forged, 50mm

HEADSET

FSA, Orbit 1.5 ZS No.57B ACB cartridge bearings

GRIPS

SB3, Race One Lock

PEDALS

Moustache, Alloy w/plateform and reflectors

WARRANTY

5 years frame and Moustache Bikes fork - 2 years motor, battery (or 500 cycles) and accessories

SIZES

Small (1,56 - 1,72), Medium (1,69 - 1,85), Large (1,82 - 1,98), X-Large (1,95 - 2,11)

COLOR

Black / Raspberry, glossy

TOTAL WEIGHT AUTHORIZED

150 kg

WEIGHT

23.7 kg

Scan to find this bike online

MOUSTACHE

SAMEDI 29
GAME 8

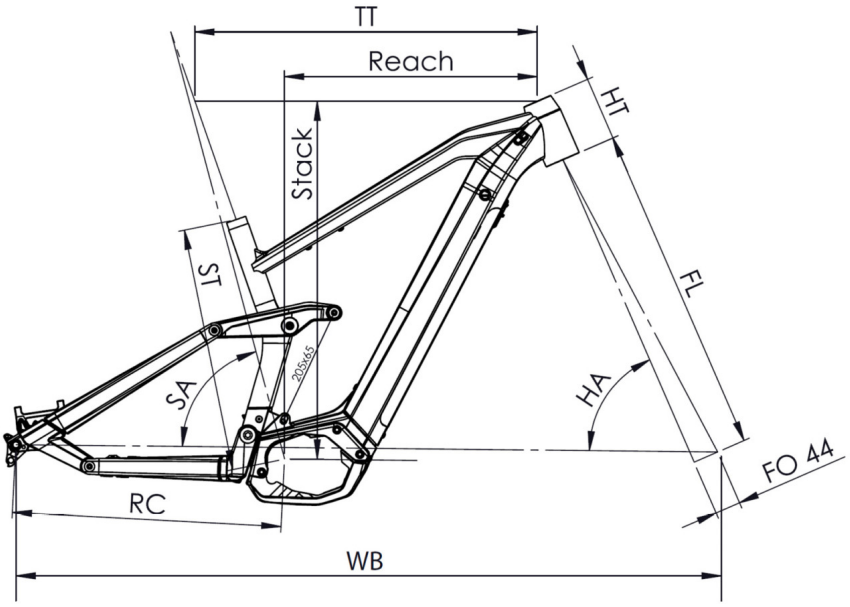

TAILLE - ST	mm	380 (S)	420 (M)	460 (L)	500 (XL)
Taille utilisateur (à titre indicatif)	mm	1,56 - 1,72	1,69 - 1,85	1,82 - 1,98	1,95 - 2,11
Tube supérieur (mesure horizontale) - TT	mm	574	604	630	654
Bases - RC	mm	460	460	460	460
Douille de direction - HT	mm	100	110	130	140
Empattement - WB	mm	1185	1216	1244	1271
Longueur de fourche - FL	mm	583,7	583,7	583,7	583,7
Hauteur boitier - BB	mm	362	362	362	362
Angle de selle - SA	°	73,6	73,6	73,6	73,6
Angle de direction - HA	°	65	65	65	65
Reach	mm	392	420	440	462
Stack	mm	616	626	645	654

Scan to find this bike online

MOUSTACHE