DIMANCHE 28 ROAD 4

D84ONM400260



Product specifications may change without notice. Non-contractual information.

FRAME
Dimanche 28 Open, 6061 T4-T6 alloy, variable thickness hydroformed tubes, CompactTube integration and internal cable routing

FORK
Dimanche 28, full carbon, tapered steerer tube 1"1/8-1"1/2, FlatMount 160mm direct brake mount, 12x100mm axle, 50mm offset, for tires in 700x45, mounts for mudguard

MOTOR
Bosch, Performance Line SX, Smart System, 60Nm

BATTERY
Bosch, CompactTube 400Wh, Smart System

DISPLAY
Bosch, Kiox 300, Smart System

REMOTE
Bosch, System Controller and Mini Remote, Smart System

CONDITIONS
Maximum distance, calculated for a 70kg rider in ideal conditions. Estimate your battery range .

CHARGER
Bosch, 2Ah

BCM
Not equipped with Bosch ConnectModule

RANGE AUTONOMY
116 km

REAR DERAILLEUR
SRAM, Apex XPLR, 12-speed

CHAINRING
SRAM, Narrow-Wide, 44 teeth, chainguard

CASSETTE
SRAM, XPLR, PG-1231 12-speed, 11-44T

CHAIN
Sram, Apex, 12-speed, 120 links

CRANKS
FSA, forged aluminum, 170mm

FRONT BRAKE
SRAM, Apex, hydraulic disc

REAR BRAKE
SRAM, Apex, hydraulic disc

FRONT ROTOR
SRAM, Paceline, 160mm

REAR ROTOR
SRAM, Paceline, 160mm

FRONT HUB
Moustache, 24H, 12x100mm, thru axle

REAR HUB
Moustache, 24H, 12x142mm, thru axle

FRONT RIM
Moustache, al:30, alloy 6061, welded, 24 holes, 700c, 22mm internal width

REAR RIM
Moustache, al:30, alloy 6061, welded, 24 holes, 700c, 22mm internal width

WHEELS
Moustache Al30 / Schwalbe Pro One 700x34

FRONT TYRE
Schwalbe, Pro One, 700x34C, SuperRace, TLE

REAR TYRE
Schwalbe, Pro One, 700x34C, SuperRace, TLE

HANDLEBAR
Moustache, alloy, rise 10, drop 129, reach 65, flare 16°, 420mm

STEM
Moustache, 3D forged Aluminum, 70mm

HEADSET
Acros, AZF-725, sealed bearings, internal routing

GRIPS
Moustache bar tape, gel 2.5mm

SADDLE
Selle Royal, SRX

SEATPOST
Moustache, alloy, 27.2mm, 350mm

SEATCLAMP
Moustache, alloy, 34.9mm

FRONT LIGHT
-

PEDALS
alloy platform with reflectors

SIZE
M

COLOR
Black glossy

WEIGHT
16.2 kg

GVWR
120 kg

WARRANTY
5 years frame and fork Moustache Bikes - 2 years motor, battery

Find this bike online

MOUSTACHE

DIMANCHE 28
ROAD 4

D84ONM400260



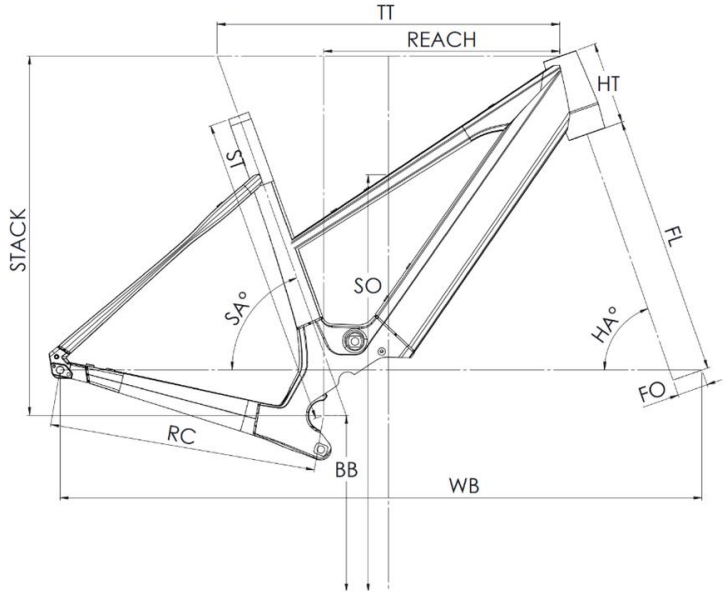

Dimanche 28 Road 2/4 Open - Dimanche 29 Gravel 2/4 Open

ST - Taille / Size	mm	430 (XS)	460 (S)	500 (M)
Taille utilisateur / User size	m	1,43 - 1,55	1,53 - 1,68	1,66 - 1,81
TT - Tube supérieur / Top tube	mm	535	545	565
RC - Bases / Rear center	mm	437	437	437
HT - Douille de direction / Headtube	mm	120	120	135
WB - Empattement / Wheelbase	mm	1039	1039	1049
FL - Longueur de fourche / Fork length	mm	415	415	415
BB - Hauteur de boitier / BB height	mm	288,5	288,5	288,5
SA - Angle de selle / Seat angle	°	73,6	73,3	73
HA - Angle de direction / Head angle	°	69,3	70	70,7
Reach	mm	369	375	386
Stack	mm	566	569	586
SO - Enjambement / Standover	mm	662	664	680

Find this bike online

TOUSTACHE