LUNDI 27 CHAIN

L73OPM300270



Product specifications may change without notice. Non-contractual information.

FRAME
Lundi 27 low step-over, 6061 T4-T6 alloy, hydroformed and extruded triple cavity tubes for optimal stiffness.

FORK
Lundi, alloy w/integrated cable routing and custom front carrier attachments

MOTOR
Bosch, Hub Line BDU30, Smart System, 45 Nm

BATTERY
Bosch, PowerTube 360Wh, Smart System

REMOTE
Bosch, Purion 200, Smart System

CONDITIONS
Maximum distance, calculated for a 70kg rider in ideal conditions. Estimate your battery range .

CHARGER
Bosch, 4Ah

BCM
Not equipped with Bosch ConnectModule

RANGE AUTONOMY
70 km

AUTONOMY
4h

REAR DERAILLEUR
Shimano, CUES, RD-U3020, 9-speed

CHAINRING
Kit 40 tooth chainring, Narrow Wide & Magan 170mm cranks

CASSETTE
Sunrace, CSU98.9AW, 9-speed, 11-36T

CHAIN
Shimano, 118 links

SHIFTER
Shimano, CUES, SL-U4000-9R, 9-speed

CRANKS
BB E-type, Stronglight, 73mm, 131mm

FRONT BRAKE
Shimano, MT200, hydraulic disc

REAR BRAKE
Shimano, MT200, hydraulic disc

FRONT ROTOR
Shimano, 180mm

REAR ROTOR
Shimano, 160mm

FRONT HUB
Shimano, 32H, 9x100mm, QR (Quick Release)

REAR HUB
Bosch, Hub Line BDU30, Smart System, 45 Nm

FRONT RIM
Alloy , 32 holes, 27.5', internal width 23 mm

REAR RIM
Alloy , 32 holes, 27.5', internal width 23 mm

WHEELS
Schwalbe, Super Moto-X, 27.5x2.40, Reflective

FRONT TYRE
Schwalbe, Super Moto-X, 27.5x2.40, Reflective

REAR TYRE
Schwalbe, Super Moto-X, 27.5x2.40, Reflective

HANDLEBAR
Moustache, Lundi custom ergonomic, alloy

HEADSET
FSA, No 28/41 integrated

GRIPS
SB3, Ergonomic

SADDLE
Selle Royal, Essenza + moderate wide

SEATPOST
Suspension, alloy, 31.6mm, 350mm, 40mm travel

SEATCLAMP
Moustache, alloy, 34.9mm

FRONT LIGHT
Spanninga, integrated, 30 lux, powered by main battery

REAR LIGHT
High-intensity LED integrated reflector, powered by main battery

HORN
Spanninga Minibell Black

LOCK
ABUS, 4650SL,, same key for framelock & battery lock

KICKSTAND
Moustache, adjustable

MUDGUARD
Moustache, alloy, double wall design, w/alloy stays

CARRIER
Moustache, alloy, removable QL3 lateral fixation, MIK HD platform. Moustache protect option.

FRONT CARRIER
PB-KITOP

PEDALS
alloy platform with reflectors

SIZE
M

COLOR
Lavender mat

LUNDI 27 CHAIN

L73OPM300270



WEIGHT
24.2 kg

GVWR
150 kg

WARRANTY
5 years frame and fork Moustache Bikes - 2 years motor, battery

Find this bike online

MOUSTACHE

LUNDI 27 CHAIN

L73OPM300270



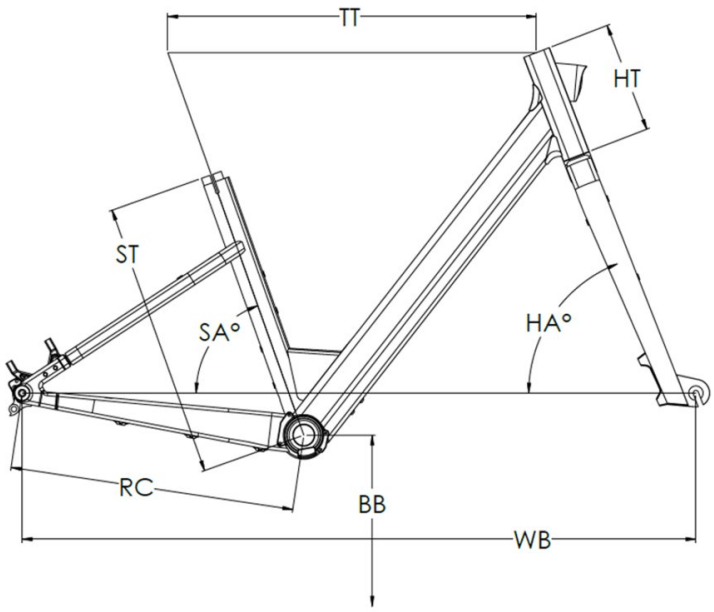

Lundi 27 Hub

ST - Taille / Size	mm	390 (XS/S)	460 (M/L)
Taille utilisateur / User size	m	1,55 - 1,65	1,62 - 1,90
TT - Tube supérieur / Top tube	mm	615	615
RC - Bases / Rear center	mm	480	480
HT - Douille de direction / Headtube	mm	185	185
WB - Empattement / Wheelbase	mm	1129	1129
FL - Longueur de fourche / Fork length	mm	438,5	438,5
BB - Hauteur de boitier / BB height	mm	285	285
SA - Angle de selle / Seat angle	°	70,4	70,4
HA - Angle de direction / Head angle	°	69	69
Reach	mm	388	388
Stack	mm	637	637
SO - Enjambement / Standover	mm	427	427

Find this bike online

MOUSTACHE