MARDI 27.4

MA4OGM800270



Product specifications may change without notice. Non-contractual information.

FRAME
Mardi Open, 6061 T4-T6 alloy, hydroformed tubes and extruded triple cavity tubes for optimal stiffness, Bosch PowerTube battery integration, integrated cable routing

FORK
SR Suntour, XCM32-ATB, NLO, preload adjustment & lockout function, 100mm travel

MOTOR
Bosch, Performance Line PX BDU34, Smart System, 90 Nm

BATTERY
Bosch, PowerTube 800Wh, Smart System

REMOTE
Bosch, Purion 200, Smart System

CONDITIONS
Maximum distance, calculated for a 70kg rider in ideal conditions. Estimate your battery range .

CHARGER
Bosch, 4Ah

BCM
Not equipped with Bosch ConnectModule

RANGE AUTONOMY
180 km

CHAINRING
Gates, 46T

CASSETTE
Gates, 30T

CHAIN
Gates, CDX belt, clean, smooth and resistant

SHIFTER
Shimano, Nexus SL-C7000-5, 5-speed

CRANKS
Stronglight, aluminium, 170mm, ISI

FRONT BRAKE
Shimano, MT200, hydraulic disc

REAR BRAKE
Shimano, MT200, hydraulic disc

FRONT ROTOR
Shimano, 180mm

REAR ROTOR
Shimano, 160mm

FRONT HUB
Shimano, 32H, 9x100mm, QR (Quick Release)

REAR HUB
Shimano, Nexus, 32H, 263% gear range, 10x135mm, nut

FRONT RIM
Alloy , 32 holes, 27.5', internal width 23 mm

REAR RIM
Alloy , 32 holes, 27.5', internal width 23 mm

WHEELS
Schwalbe, Super Moto-X, 27.5x2.40, Reflective

FRONT TYRE
Schwalbe, Super Moto-X, 27.5x2.40, Reflective

REAR TYRE
Schwalbe, Super Moto-X, 27.5x2.40, Reflective

HANDLEBAR
Moustache, ergonomic, alloy, 660mm, 30° backsweep

STEM
Moustache, alloy, adjustable, 90mm

HEADSET
Acros, AZF-699, sealed bearings, internal routing, blocklock

GRIPS
SB3, Ergonomic

SADDLE
Selle Royal, Essenza + moderate wide

SEATPOST
Suspension, alloy, 31.6mm, 350mm, 40mm travel

SEATCLAMP
Moustache, alloy, 34.9mm

FRONT LIGHT
AXA, NXT, 80 lux, powered by main battery

REAR LIGHT
High-intensity LED integrated reflector, powered by main battery

HORN
Spanninga Minibell Black

LOCK
ABUS, 4650SL,, same key for framelock & battery lock

KICKSTAND
Moustache, adjustable

MUDGUARD
Moustache, alloy, double wall design, w/alloy stays

CARRIER
Moustache, alloy, removable QL3 lateral fixation, MIK HD platform. Moustache protect option.

FRONT CARRIER
PB-KITOP

PEDALS
alloy platform with reflectors

SIZE
M

COLOR
Silk Grey

WEIGHT
29.4 kg

MARDI 27.4

MA4OGM800270



GVWR

135 kg

WARRANTY

5 years frame and fork Moustache Bikes - 2 years motor, battery

Find this bike online

MARDI 27.4

MA4OGM800270



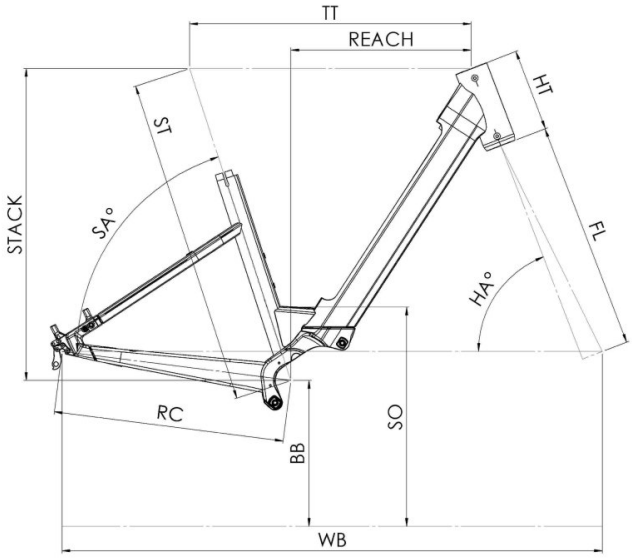

Mardi 27 MY27

ST - Taille / Size	mm	390 (S)	450 (M)	510 (L)	550 (XL)
Taille utilisateur / User size	m	1,49 - 1,61	1,59 - 1,76	1,74 - 1,92	1,90 - 2,05
TT - Tube supérieur / Top tube	mm	557	580	610	645
RC - Bases / Rear center	mm	475	475	475	475
HT - Douille de direction / Headtube	mm	170	170	190	210
WB - Empattement / Wheelbase	mm	1112	1126	1157	1193
FL - Longueur de fourche / Fork length	mm	501,5	501,5	501,5	501,5
BB - Hauteur de boitier / BB height	mm	300	300	300	300
SA - Angle de selle / Seat angle	°	71,3	71,3	71,3	71,3
HA - Angle de direction / Head angle	°	66,6	67,4	67,4	67,4
Reach	mm	333	354	378	407
Stack	mm	661	666	684	702
SO - Enjambement / Standover	mm	140	140	140	140

Find this bike online

MOUSTACHE