# TRAIL 150.4 2025

TR4FJX7E0250




Product specifications may change without notice. Non-contractual information.

**FRAME**

Trail, 6061 T4-T6 alloy, w/150mm travel, Bosch PowerTube battery custom integration (horizontal), 12x148mm, Boost, motor cover w/cooling fins & chainguide

**FORK**

RockShox, PSYLO Silver RC, Solo Air spring w/ external rebound, Motion Control damping featuring low speed compression adjustment to lockout 150mm travel, 15x110mm, Boost, 44mm Offset, mini-fender compatible

**SHOCK**

Moustache, Magic Grip Control 150, specific Air Shock w/ 2-position platform and dynamic control of rebound, Trunion mount, build-in 205x60mm, 150mm travel

**MOTOR**

Bosch, Performance Line CX BDU37,Smart System, 85Nm

**BATTERY**

Bosch, PowerTube 750Wh, horizontal, Smart System

**REMOTE**

Bosch, Purion 200, Smart System

**CONDITIONS**

Maximum distance, calculated for a 70kg rider in ideal conditions.  Estimate your battery range .

**CHARGER**

Bosch, 4Ah

**BCM**

Not equipped with Bosch ConnectModule

**RANGE AUTONOMY**

117 km

**REAR DERAILLEUR**

Shimano, XT, RD-M8100-SGS, 12-speed

**CHAINRING**

FSA, Narrow Wide, 34 teeth

**CASSETTE**

Shimano, Deore, CS-M6100 12-speed, 10-51T

**CHAIN**

Shimano, CN-M6100, 12-speed, 120 links

**SHIFTER**

Shimano, Deore, SL-M6100, 12-speed

**CRANKS**

Moustache, forged aluminium, 165mm

**FRONT BRAKE**

Magura, MT5, hydraulic disc, 4 pistons

**REAR BRAKE**

Magura, MT5, hydraulic disc, 4 pistons

**FRONT ROTOR**

Magura, MDR-C, 203mm

**REAR ROTOR**

Magura, MDR-C, 203mm

**FRONT HUB**

Shimano, 28H, 15x110mm, thru axle

**REAR HUB**

Shimano, 28H, 12x148mm, thru axle

**FRONT RIM**

Moustache, asymmetric, alloy 6061E, welded, double wall, 28 holes, 29", internal width 30mm, mounted with Tubeless valves & flap, brass nuts with locking "Blue Nylon" insert

**REAR RIM**

Moustache, asymmetric, alloy 6061E, welded, double wall, 28 holes, 29", internal width 30mm, mounted with Tubeless valves & flap, brass nuts with locking "Blue Nylon" insert

**WHEELS**

Moustache AL / Maxxis Rekon 29x2.4

**FRONT TYRE**

Maxxis, Rekon, 29x2.40, foldable, EXO/TR (Tubeless Ready)

**REAR TYRE**

Maxxis, Rekon, 29x2.40, foldable, EXO/TR (Tubeless Ready)

**HANDLEBAR**

Moustache, alloy, 760mm, 31.8mm, 12mm rise, 9° backsweep, 5° upsweep

**STEM**

Moustache, alloy, 3D forged, 40mm

**HEADSET**

Acros, AZF-725, sealed bearings, internal routing

**GRIPS**

SB3, Race

**SADDLE**

Moustache, Sport, steel rails

**SEATPOST**

EXA, 900i, dropper-post w/remote lever, 31.6mm, 170mm

**SEATCLAMP**

Moustache, alloy, 38.6mm

**FRONT LIGHT**

Trelock, Lighthammer, 80 lux, powered by main battery

**REAR LIGHT**

Spanninga, Presto2Guard, powered by main battery

**KICKSTAND**

Moustache, adjustable

**MUDGUARD**

Moustache, stable and perfect protection thanks to the integrated mudflap

**CARRIER**

Moustache, alloy, light, removable QL3 lateral fixation

# TRAIL 150.4 2025

TR4FJX7E0250




**PEDALS**
alloy platform with reflectors

**SIZE**
XL

**COLOR**
Black / ocker glossy

**WEIGHT**
26.9 kg

**GVWR**
140 kg

**WARRANTY**
5 years frame and fork Moustache Bikes - 2 years motor, battery

**Find this bike online**

MOUSTACHE

# TRAIL 150.4
# 2025

TR4FJX7E0250




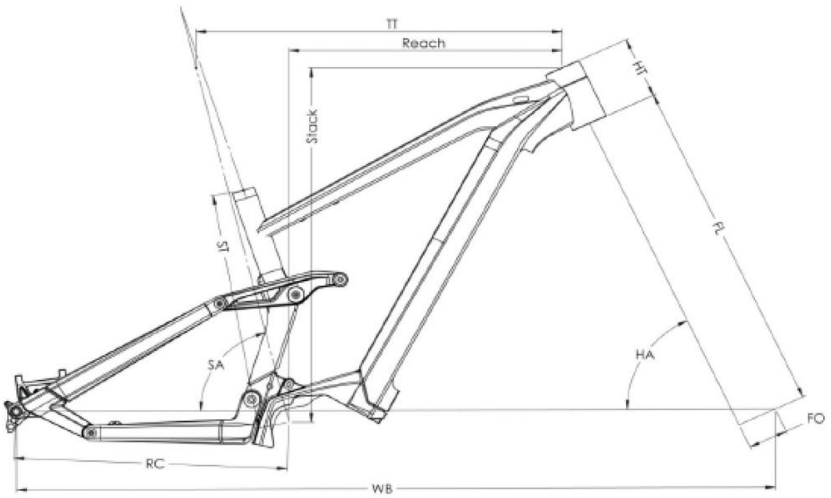


## Trail 150.2 / 4

| ST - Taille / Size | mm | 390 (S) | 420 (M) | 450 (L) | 480 (XL) |
|---|---|---|---|---|---|
| Taille utilisateur / User size | m | 1,56 - 1,72 | 1,69 - 1,85 | 1,82 - 1,98 | 1,95 - 2,11 |
| TT - Tube supérieur / Top tube | mm | 588 | 618 | 643 | 668 |
| RC - Bases / Rear center | mm | 462 | 462 | 462 | 462 |
| HT - Douille de direction / Headtube | mm | 100 | 110 | 130 | 140 |
| WB - Empattement / Wheelbase | mm | 1218 | 1250 | 1279 | 1306 |
| FL - Longueur de fourche / Fork length | mm | 560 | 560 | 560 | 560 |
| BB - Hauteur de boitier / BB height | mm | 350 | 350 | 350 | 350 |
| SA - Angle de selle / Seat angle | ° | 76,6 | 76,6 | 76,6 | 76,6 |
| HA - Angle de direction / Head angle | ° | 65,6 | 65,6 | 65,6 | 65,6 |
| Reach | mm | 441 | 468 | 489 | 512 |
| Stack | mm | 623 | 632 | 650 | 659 |
| SO - Enjambement / Standover | mm | 836 | 845 | 863 | 873 |

**Find this bike online**

MOUSTACHE