XROAD FS 2 2026

XR2FBL50S260



Product specifications may change without notice. Non-contractual information.

FRAME
Xroad FS, aluminium, one-piece gravity cast, low stepover, increase rigidity thanks to internal ribs, unified rear swingarm, discreet internal cable routing, integrated battery and drive unit

FORK
SR Suntour, XCM32-ATB, LO, preload adjustment & lockout function, 100mm travel

SHOCK
Moustache, Magic Grip Control 115, specific Air Shock with 2-position platform and dynamic control of rebound, build-in 165x38mm, 115mm travel

MOTOR
Bosch, Performance Line BDU34, Smart System, 75Nm

BATTERY
Bosch, PowerTube 540Wh

REMOTE
Bosch, Purion 200, Smart System

CONDITIONS
Maximum distance, calculated for a 70kg rider in ideal conditions. Estimate your battery range .

CHARGER
Bosch, 2Ah

BCM
Not equipped with Bosch ConnectModule

RANGE AUTONOMY
124 km

REAR DERAILLEUR
Shimano, CUES, RD-U3020, 9-speed

CHAINRING
Narrow-Wide, 40 teeth

CASSETTE
Shimano, CUES, CS-LG300 9-speed, 11-36T

CHAIN
Shimano, LG500, 130 links

SHIFTER
Shimano, CUES, SL-U4000-9R, 9-speed

CRANKS
Stronglight, aluminium, 170mm, ISI

FRONT BRAKE
Shimano, MT200, hydraulic disc

REAR BRAKE
Shimano, MT200, hydraulic disc

FRONT ROTOR
Shimano, 180mm

REAR ROTOR
Shimano, 180mm

FRONT HUB
Shimano, 32H, 9x100mm, QR (Quick Release)

REAR HUB
Shimano, 32H, 9x100mm, QR (Quick Release)

FRONT RIM
Alloy , 32 holes, 27.5', internal width 23 mm

REAR RIM
Alloy , 32 holes, 27.5', internal width 23 mm

WHEELS
Schwalbe, Smart Sam, 27.5x2.35, reflective

FRONT TYRE
Schwalbe, Smart Sam, 27.5x2.35, reflective

REAR TYRE
Schwalbe, Smart Sam, 27.5x2.35, reflective

HANDLEBAR
Moustache, ergonomic, alloy, 660mm, 30° backsweep

STEM
Moustache, alloy, adjustable, 110mm

HEADSET
Acros, AZF-699, sealed bearings, internal routing, blocklock

GRIPS
SB3, Ergonomic

SADDLE
Selle Royal, Essenza + moderate

SEATPOST
EXA, 900i, dropper-post w/remote lever, 31.6mm, 150mm

SEATCLAMP
Moustache, alloy, 34.9mm

FRONT LIGHT
AXA, NXT, 80 lux, powered by main battery

REAR LIGHT
Spanninga, Presto2Guard, powered by main battery

HORN
Spanninga Minibell Black

LOCK
Battery lock ABUS, Xplus, One-Key option. Framelock Axa Block XXL.

KICKSTAND
Moustache, adjustable

MUDGUARD
Moustache, alloy, double wall design, w/alloy stays

CARRIER
Moustache, alloy, suspended, removable QL3 lateral fixation, MIK HD platform

FRONT CARRIER
PB-KITOP

XROAD FS 2 2026

XR2FBL50S260



PEDALS
alloy platform with reflectors

SIZE
L

COLOR
Marine blue mat

WEIGHT
29.4 kg

GVWR
135 kg

WARRANTY
5 years frame and fork Moustache Bikes - 2 years motor, battery

Find this bike online

MOUSTACHE

XROAD FS 2
2026

XR2FBL50S260



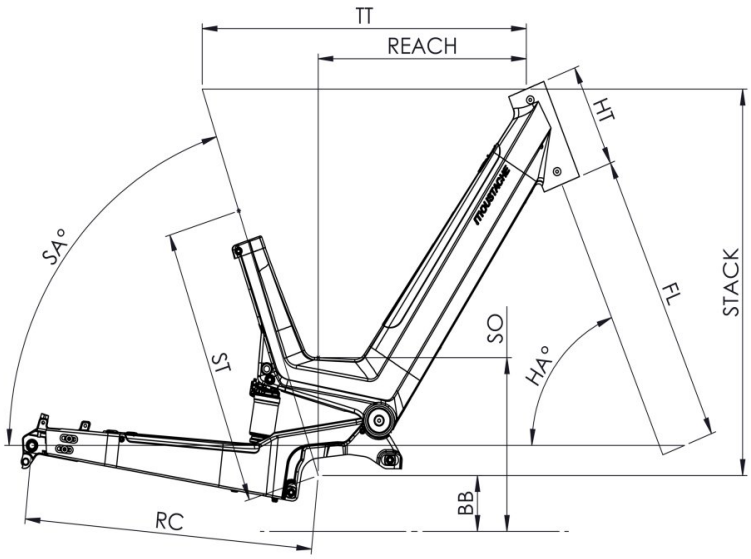

Xroad FS / Samedi 27 OFF FS

ST - Taille / Size	mm	(S)	(M)	(L)
Taille utilisateur / User size	m	1,55 - 1,72	1,65 - 1,85	1,80 - 1,95
ST - Tube de selle / Seat tube	m	410	460	460
TT - Tube supérieur / Top tube	mm	580	600	600
RC - Bases / Rear center	mm	515	515	515
HT - Douille de direction / Headtube	mm	170	180	180
WB - Empattement / Wheelbase	mm	1190	1209	1209
FL - Longueur de fourche / Fork length	mm	527.5	527.5	527.5
BB - Hauteur de boitier / BB height	mm	324	324	324
SA - Angle de selle / Seat angle	°	69.5	69.5	69.5
HA - Angle de direction / Head angle	°	66	66	66
Reach	mm	344	361	361
Stack	mm	651	661	661
SO - Enjambement / Standover	mm	518	518	518

Find this bike online

{TOUSTACHE