XROAD ES

XR1OGM500270



Product specifications may change without notice. Non-contractual information.

FRAME
Xroad Open, 6061 T4-T6 alloy, hydroformed tubes and extruded triple cavity tubes for optimal stiffness, Bosch PowerTube battery integration, integrated cable routing

FORK
SR Suntour, XCM32-ATB, 100mm travel

MOTOR
Bosch, Active Line Plus BDU34, Smart System, 60 Nm

BATTERY
Bosch, PowerTube 540Wh

REMOTE
Bosch, Purion 200, Smart System

CONDITIONS
Maximum distance, calculated for a 70kg rider in ideal conditions. Estimate your battery range .

CHARGER
Bosch, 2Ah

BCM
Not equipped with Bosch ConnectModule

RANGE AUTONOMY
132 km

REAR DERAILLEUR
Shimano, CUES, RD-U3020, 9-speed

CHAINRING
Narrow-Wide, 40 teeth

CASSETTE
Sunrace, CSU98.9AW, 9-speed, 11-36T

CHAIN
Shimano, LG500, 108 links

SHIFTER
Shimano, CUES, SL-U4000-9R, 9-speed

CRANKS
Stronglight, aluminium, 170mm, ISI

FRONT BRAKE
Shimano, MT200, hydraulic disc

REAR BRAKE
Shimano, MT200, hydraulic disc

FRONT ROTOR
Shimano, 180mm

REAR ROTOR
Shimano, 180mm

FRONT HUB
Shimano, 32H, 9x100mm, QR (Quick Release)

REAR HUB
Shimano, 32H, 9x135mm, QR (Quick Release)

FRONT RIM
Alloy , 32 holes, 27.5', internal width 23 mm

REAR RIM
Alloy , 32 holes, 27.5', internal width 23 mm

WHEELS
Schwalbe, Smart Sam, 27.5x2.25

FRONT TYRE
Schwalbe, Smart Sam, 27.5x2.25

REAR TYRE
Schwalbe, Smart Sam, 27.5x2.25

HANDLEBAR
Moustache, ergonomic, alloy, 660mm, 30° backsweep

STEM
Moustache, alloy, adjustable, 90mm

HEADSET
Acros, AZF-699, sealed bearings, internal routing, blocklock

GRIPS
SB3, Ergonomic

SADDLE
Selle Royal, Wave

SEATPOST
Moustache, alloy, 31.6mm, 350mm

SEATCLAMP
Moustache, alloy, 34.9mm

FRONT LIGHT
AXA, NXT, 30 lux, powered by main battery

REAR LIGHT
High-intensity LED integrated reflector, powered by main battery

HORN
Spanninga Minibell Black

LOCK
-

KICKSTAND
Moustache, adjustable

MUDGUARD
Moustache, alloy, double wall design, w/alloy stays

CARRIER
Moustache, alloy, removable QL3 lateral fixation, MIK HD platform. Moustache protect option.

FRONT CARRIER
PB-KITOP

PEDALS
alloy platform with reflectors

SIZE
M

COLOR
Titanium matt

WEIGHT
26.5 kg

XROAD ES

XR1OGM500270



GVWR

135 kg

WARRANTY

5 years frame and fork Moustache Bikes - 2 years motor, battery

Find this bike online

MOUSTACHE

XROAD ES

XR1OGM500270



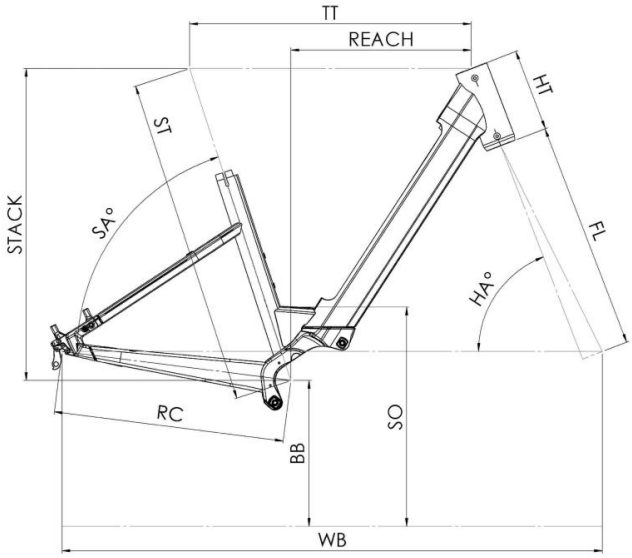

Xroad 2 / 4 / 6 / 4 800Wh / 6 800Wh Open

ST - Taille / Size	mm	390 (S)	450 (M)	510 (L)	550 (XL)
Taille utilisateur / User size	m	1,49 - 1,61	1,59 - 1,76	1,74 - 1,92	1,90 - 2,05
TT - Tube supérieur / Top tube	mm	557	580	610	645
RC - Bases / Rear center	mm	475	475	475	475
HT - Douille de direction / Headtube	mm	170	170	190	210
WB - Empattement / Wheelbase	mm	1122	1134	1166	1202
FL - Longueur de fourche / Fork length	mm	527,5	527,5	527,5	527,5
BB - Hauteur de boitier / BB height	mm	300	300	300	300
SA - Angle de selle / Seat angle	°	70,8	70,8	70,8	70,8
HA - Angle de direction / Head angle	°	65,3	66,2	66,2	66,2
Reach	mm	320,0	342,0	365,0	394,0
Stack	mm	677	682	701	720
SO - Enjambement / Standover	mm	140	140	140	140

Find this bike online

MOUSTACHE