LUNDI 20
CARGO 5

L05OGU5E0250



Product specifications may change without notice. Non-contractual information.

FRAME
Lundi 20 low step-over, 6061 T4-T6 alloy, hydroformed and extruded triple cavity tubes for optimal stiffness. Integrated cable routing. Optimal geometry for stable handling and great manoeuvrability.

FORK
SR Suntour Mobie 34 Suspension Fork, designed to withstand the forces of cargo use.
70mm travel with Lockout function. Boost spacing

MOTOR
Bosch, Cargo Line, Smart System, 85Nm

BATTERY
Bosch, PowerPack 545Wh, Smart System

REMOTE
Bosch, Purion 200, Smart System

CONDITIONS
Maximum distance, calculated for a 70kg rider with 70kg payload in ideal conditions. Estimate your battery range .

CHARGER
Bosch, 2Ah

RANGE AUTONOMY
100 km

CHAINRING
Gates, 55T

CASSETTE
Gates, 22T

CHAIN
Gates, CDX belt, clean, smooth and resistant

SHIFTER
Enviolo, PRO, rotating handle with visual indicator

CRANKS
Moustache aluminium, 170 mm, compatible with Gen2 / Gen4 motor

FRONT BRAKE
Magura, MT4, hydraulic disc

REAR BRAKE
Magura, MT4, hydraulic disc

FRONT ROTOR
Magura, MDR-C, 203mm

REAR ROTOR
Magura, MDR-C, 180mm

FRONT HUB
Moustache, 32H, 15x110mm, thru axle

REAR HUB
Enviolo, HD 380%, 32H, 12x148mm, nut

FRONT RIM
Moustache, asymmetric, alloy 6061E, welded, 32 holes, 20", internal width 35mm

REAR RIM
Moustache, asymmetric, alloy 6061E, welded, 32 holes, 20", internal width 35mm

WHEELS
Schwalbe, Pick-Up, 20x2.35, Super Defense

FRONT TYRE
Schwalbe, Pick-Up, 20x2.35, Super Defense

REAR TYRE
Schwalbe, Pick-Up, 20x2.35, Super Defense

HANDLEBAR
Moustache, Lundi custom ergonomic, alloy

HEADSET
NO.55R/57SC

GRIPS
Ergonomic, dual-density

SADDLE
Selle Royal, Essenza Moderate Lady

SEATPOST
Limotec, A3, suspension + telescopic, aluminium diameter 34.9mm, 100mm amplitude, 40mm suspension, comfortable and safe.

SEATCLAMP
Moustache, alloy, 34.9mm

FRONT LIGHT
AXA, NXT, 30 lux, powered by main battery

REAR LIGHT
AXA, Duo Flat, increased brightness under deceleration, powered by main battery

HORN
Spanninga Minibell Black

LOCK
AXA Imenso

KICKSTAND
Moustache, central, wide support for better stability, Pedal activated

MUDGUARD
Front: Moustache, alloy, double wall design, w/alloy stays and mudflap / Rear: PP, 180° lateral protection

CARRIER
Moustache, alloy, exclusive longtail design w/ integrated footrests. Removable side fastenings for QL3 luggage. Platform with multiple MIK HD system to rapidly attach all compatible accessories, bags and child seats. Up to 70kg load capacity. ALBERT protection bar for children safety (recommended height between 110-140cm. Smaller children require adapted baby seats)

FRONT CARRIER
Moustache, alloy, compatible with MIK baskets and accessories

PEDALS
alloy platform with reflectors

SIZE
TU

LUNDI 20 CARGO 5

L05OGU5E0250



COLOR
Silk Grey

WEIGHT
32 kg

GVWR
200 kg

WARRANTY
5 years frame and fork Moustache Bikes - 2 years motor, battery

Find this bike online

MOUSTACHE

LUNDI 20
CARGO 5

L05OGU5E0250



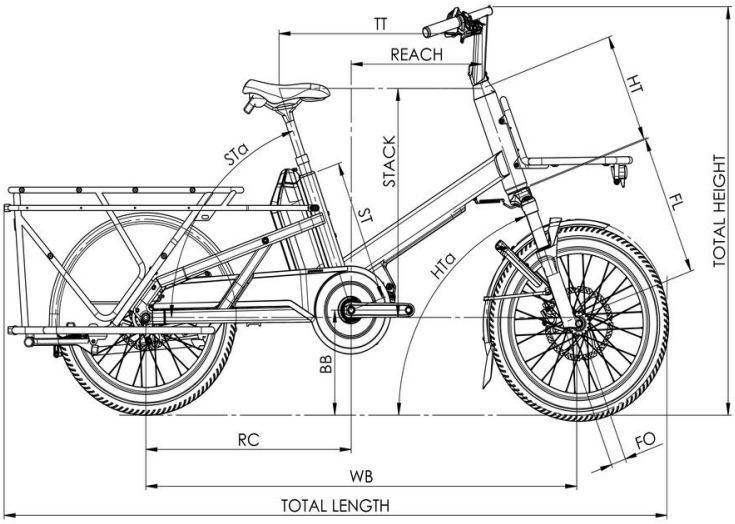

Lundi 20 Cargo 3 / 5

ST - Taille / Size	mm	390
Taille utilisateur / User size	m	1,57 - 1,90
TT - Tube supérieur / Top tube	mm	603
RC - Bases / Rear center	mm	610
HT - Douille de direction / Headtube	mm	300
WB - Empattement / Wheelbase	mm	1272
FL - Longueur de fourche / Fork length	mm	402
BB - Hauteur de boitier / BB height	mm	288
SA - Angle de selle / Seat angle	°	70,5
HA - Angle de direction / Head angle	°	69,5
Reach	mm	382
Stack	mm	622
SO - Enjambement / Standover	mm	530
Longueur totale / Total length	mm	1968
Hauteur totale / Total heigh	mm	1116

Find this bike online

MOUSTACHE