SAMEDI 26 FAT 4

SA26CF440240

Product specifications may change without notice. Non-contractual information.

FRAME
FAT 4, 6061 T4-T6 alloy, variable thickness hydroformed tubes, tapered headtube 1"1/8-1"1/2, Bosch PowerTube battery integration (Horizontal), compatible with 26 x 4.8 tires, 12x197mm rear hub

FORK
Manitou, Mastodon Comp Extended, external compression and rebound adjustment, 100mm travel, 15x150mm

MOTOR
Bosch, Performance Line CX BDU37, Smart System, 85Nm

BATTERY
Bosch, PowerTube 625Wh, horizontal, Smart System

REMOTE
Bosch, Purion 200, Smart System

CONDITIONS
Maximum distance, calculated for a 70kg rider in ideal conditions. Estimate your battery range .

CHARGER
Bosch, 4Ah

BCM
Not equipped with Bosch ConnectModule

RANGE AUTONOMY
94 km

REAR DERAILLEUR
Shimano, Deore, RD-M5100-SGS, 11-speed

CHAINRING
Narrow-Wide, 34 teeth, FAT specific

CASSETTE
Shimano, Deore, CS-M5100, 11-speed, 11-51T

CHAIN
Sram, PC1110, 11-speed, 124 links

SHIFTER
Shimano, Deore, SL-M5100-IR, 11-speed

CRANKS
Forged aluminum, 170mm, FAT specific, 30mm offset

FRONT BRAKE
Shimano, BR-M6120, hydraulic disc, 4 pistons

REAR BRAKE
Shimano, BR-M6120, hydraulic disc, 4 pistons

FRONT ROTOR
Shimano, 203mm

REAR ROTOR
Shimano, 203mm

FRONT HUB
Moustache, 32H, 15x150mm, thru axle

REAR HUB
Moustache, 32H, 12x197mm, thru axle

FRONT RIM
Moustache, alloy 6061E, welded, 32 holes, 26", internal width 80mm

REAR RIM
Moustache, alloy 6061E, welded, 32 holes, 26", internal width 80mm

FRONT TYRE
Maxxis, Minion FBF, 26x4.80

REAR TYRE
Maxxis, Minion FBR, 26x4.80

HANDLEBAR
Moustache, alloy, 760mm, 15mm rise, 9° backsweep, 5° upsweep

STEM
Moustache, 3D forged Aluminum, 60mm

HEADSET
FSA, No 57B-1

GRIPS
SB3, Race

SADDLE
Moustache, Ergonomic

SEATPOST
EXA, 900i, dropper w/remote lever, 31.6mm

SEATCLAMP
Moustache, alloy, 34.9mm

FRONT LIGHT
-

PEDALS
alloy platform with reflectors

SIZE
S

COLOR
pastel mint glossy

WEIGHT
25.5 kg

GVWR
150 kg

WARRANTY
5 years frame and fork Moustache Bikes - 2 years motor, battery

Find this bike online

MOUSTACHE

SAMEDI 26
FAT 4

SA26CF440240

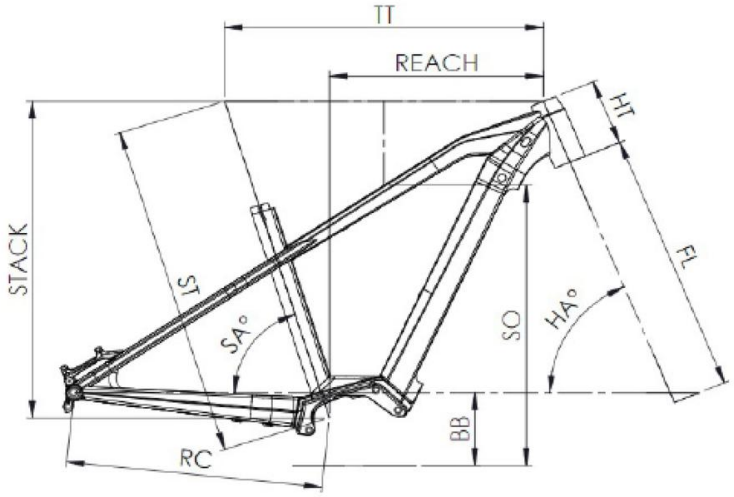

Fat

ST - Taille / Size	mm	400 (S)	440 (M)	490 (L)
Taille utilisateur / User size	m	1,50 - 1,68	1,65 - 1,83	1,81 - 1,95
TT - Tube supérieur / Top tube	mm	575	600	625
RC - Bases / Rear center	mm	483	483	483
HT - Douille de direction / Headtube	mm	120	130	140
WB - Empattement / Wheelbase	mm	1159	1176	1202
FL - Longueur de fourche / Fork length	mm	513	513	513
BB - Hauteur de boitier / BB height	mm	330	330	330
SA - Angle de selle / Seat angle	°	73	72,5	72,5
HA - Angle de direction / Head angle	°	67,3	67,5	67,5
Reach	mm	386	402	424
Stack	mm	615	625	634
SO - Enjambement / Standover	mm	787	789	793

Find this bike online

MOUSTACHE