SAMEDI 27
XROAD 6 2025

XR6ONS600250



Product specifications may change without notice. Non-contractual information.

FRAME
Xroad Open, 6061 T4-T6 alloy, variable thickness hydroformed tubes, Bosch PowerTube battery integration (vertical), integrated cable routing

FORK
SR Suntour, Mobie 25, preload adjustment & lockout function, 100mm travel

MOTOR
Bosch, Performance Line CX BDU37, Smart System, 85Nm

BATTERY
Bosch, PowerTube 625Wh, horizontal, Smart System

REMOTE
Bosch, Purion 200, Smart System

CONDITIONS
Maximum distance, calculated for a 70kg rider in ideal conditions. Estimate your battery range .

CHARGER
Bosch, 4Ah

BCM
Not equipped with Bosch ConnectModule

RANGE AUTONOMY
138 km

REAR DERAILLEUR
Shimano, CUES, RD-U6020-11, 11-speed

CHAINRING
FSA, Narrow-Wide, 38 teeth, chainguard

CASSETTE
Shimano, CUES, CS-LG400 11-speed, 11-45T

CHAIN
Shimano, CN-LG500, 120 links

SHIFTER
Shimano, CUES, SL-U6000-11R, 11-speed

CRANKS
Moustache aluminium, 170 mm, compatible with Gen2 / Gen4 motor

FRONT BRAKE
Shimano, MT200, hydraulic disc

REAR BRAKE
Shimano, MT200, hydraulic disc

FRONT ROTOR
Shimano, 180mm

REAR ROTOR
Shimano, 160mm

FRONT HUB
Shimano, 32H, 15x100mm, thru axle

REAR HUB
Shimano, 32H, 9x141mm, QR (Quick Release)

FRONT RIM
Moustache, asymmetric, alloy 6061E, welded, 32 holes, 27.5'', internal width 23mm

REAR RIM
Moustache, asymmetric, alloy 6061E, welded, 32 holes, 27.5'', internal width 23mm

FRONT TYRE
Schwalbe, Smart Sam, 27.5x2.25

REAR TYRE
Schwalbe, Smart Sam, 27.5x2.25

HANDLEBAR
Moustache, ergonomique, aluminium, 680mm, backsweep 25°

STEM
Moustache, alloy, adjustable, 90mm

HEADSET
FSA, No 57B

GRIPS
SB3, Race

SADDLE
Selle Royal, Essenza + moderate

SEATPOST
EXA, 860i, suspension dropper-post w/remote lever, 31.6mm, 75mm

SEATCLAMP
Moustache, alloy, 34.9mm

FRONT LIGHT
Trelock, Lighthammer, 80 lux, powered by main battery

REAR LIGHT
Spanninga, Presto2Guard, powered by main battery

LOCK
AXA, Block XXL, same key for framelock & battery lock

KICKSTAND
Moustache, adjustable

MUDGUARD
Moustache, alloy, double wall design, w/alloy stays

CARRIER
Moustache, alloy, removable QL3 lateral fixation, MIK HD platform

PEDALS
alloy platform with reflectors

SIZE
S

COLOR
Black glossy

WEIGHT
25.9 kg

GVWR
135 kg

SAMEDI 27
XROAD 6 2025

XR6ONS600250



WARRANTY

5 years frame and fork Moustache Bikes - 2 years motor, battery

Find this bike online

SAMEDI 27
XROAD 6 2025

XR6ONS600250



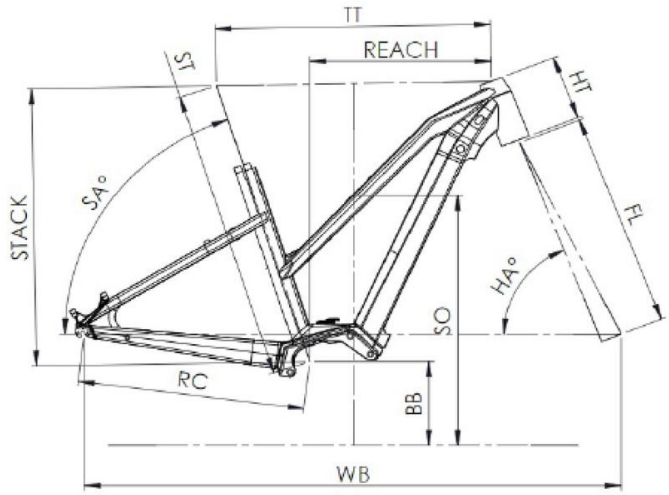

Xroad 6 Open

ST - Taille / Size	mm	390 (S)	450 (M)	510 (L)
Taille utilisateur / User size	m	1,49 - 1,61	1,59 - 1,76	1,74 - 1,90
TT - Tube supérieur / Top tube	mm	560	580	610
RC - Bases / Rear center	mm	475	475	475
HT - Douille de direction / Headtube	mm	140	140	140
WB - Empattement / Wheelbase	mm	1181	1090	1114
FL - Longueur de fourche / Fork length	mm	501	501	501
BB - Hauteur de boitier / BB height	mm	303	303	303
SA - Angle de selle / Seat angle	°	70,5	70,5	70,5
HA - Angle de direction / Head angle	°	66,5	67	67,5
Reach	mm	350	364	393
Stack	mm	620	622	625
SO - Enjambement / Standover	mm	655	659	678

Find this bike online

{TOUSTACHE