DIMANCHE 28 URBAN

D8UCNL400260



Product specifications may change without notice. Non-contractual information.

FRAME
Dimanche 28, 6061 T4-T6 alloy, variable thickness hydroformed tubes, CompactTube integration and internal cable routing

FORK
SR Suntour, NRX32IL-D Air, rebound adjustment & lockout function, 40mm travel

MOTOR
Bosch, Performance Line SX, Smart System, 60Nm

BATTERY
Bosch, CompactTube 400Wh, Smart System

DISPLAY
Bosch, Smartphone Grip

REMOTE
Bosch, Purion 200, Smart System

CONDITIONS
Maximum distance, calculated for a 70kg rider in ideal conditions. Estimate your battery range .

CHARGER
Bosch, 2Ah

BCM
Not equipped with Bosch ConnectModule

RANGE AUTONOMY
112 km

REAR DERAILLEUR
Shimano, CUES, RD-U6000-GS, 10/11-speed

CHAINRING
FSA, Narrow-Wide, 42 teeth, chainguard

CASSETTE
Shimano, CUES, CS-LG300 10-speed, 11-39T

CHAIN
Shimano, LG500, 120 links

SHIFTER
Shimano, CUES, SL-U6000-10R, 10-speed

CRANKS
Moustache, forged aluminium, 165mm

FRONT BRAKE
Shimano, MT200, hydraulic disc

REAR BRAKE
Shimano, MT200, hydraulic disc

FRONT ROTOR
Shimano, 160mm

REAR ROTOR
Shimano, 160mm

FRONT HUB
Moustache, 24H, 15x100mm, thru axle

REAR HUB
Moustache, 24H, 12x142mm, thru axle

FRONT RIM
Moustache, al:30, alloy 6061, welded, 24 holes, 700c, 22mm internal width

REAR RIM
Moustache, al:30, alloy 6061, welded, 24 holes, 700c, 22mm internal width

WHEELS
Moustache Al30 / Schwalbe G-one Comp 700x50

FRONT TYRE
Schwalbe, G-One Comp K-Guard, 700x50C

REAR TYRE
Schwalbe, G-One Comp K-Guard, 700x50C

HANDLEBAR
Moustache, alloy, 680mm, 12mm rise, 9° backsweep, 5° upsweep

STEM
Moustache, 3D forged Aluminum, 90mm

HEADSET
Acros, AZF-725, sealed bearings, internal routing

GRIPS
SB3, Ergonomic

SADDLE
Selle Royal, VIVO

SEATPOST
EXA, 860i, suspension dropper-post w/remote lever, 31.6mm, 75mm

SEATCLAMP
Moustache, alloy, 34.9mm

FRONT LIGHT
Supernova, E3 V521, 235 lumen, powerd by main battery

REAR LIGHT
Spanninga, Presto2Guard, powered by main battery

KICKSTAND
Moustache, adjustable

MUDGUARD
Moustache, alloy, double wall design, w/alloy stays

CARRIER
Moustache, alloy, light, removable QL3 lateral fixation

PEDALS
alloy platform with reflectors

SIZE
L

COLOR
Black glossy

WEIGHT
20.2 kg

GVWR
140 kg

DIMANCHE 28 URBAN

D8UCNL400260



WARRANTY

5 years frame and fork Moustache Bikes - 2 years motor, battery

Find this bike online

DIMANCHE 28 URBAN

D8UCNL400260



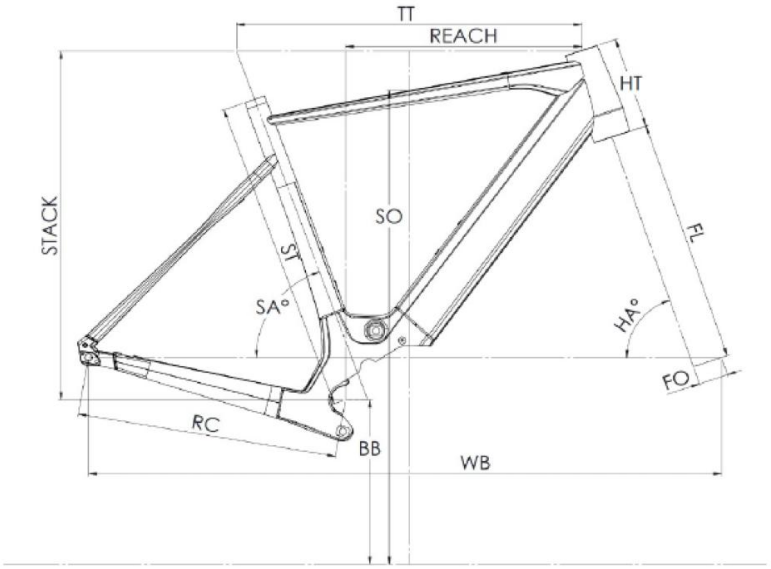

Dimanche 28 Urban

ST - Taille / Size	mm	460 (S)	500 (M)	540 (L)	580 (XL)
Taille utilisateur / User size	m	1,53-1,68	1,66-1,81	1,79-1,94	1,92-2,07
TT - Tube supérieur / Top tube	mm	545	565	585	605
RC - Bases / Rear center	mm	437	437	437	437
HT - Douille de direction / Headtube	mm	120	135	160	180
WB - Empattement / Wheelbase	mm	1040	1050	1062	1071
FL - Longueur de fourche / Fork length	mm	445	445	445	445
BB - Hauteur de boitier / BB height	mm	297	297	297	297
SA - Angle de selle / Seat angle	°	72,5	72,5	72,5	72,5
HA - Angle de direction / Head angle	°	68,9	69,6	70,2	70,9
Reach	mm	363	374	383	393
Stack	mm	576	594	620	642
SO - Enjambement / Standover	mm	782	810	839	860

Find this bike online

TOUSTACHE