SAMEDI 27 X2 MTB

TA0CGU100260



Product specifications may change without notice. Non-contractual information.

FRAME
6061 T4-T6 alloy - Extruded & hydroformed variable thickness tubes - rear motor - tapered headtube - 27.5 Plus - 12x148mm Boost

FORK
SR Suntour, Aion 36, 140mm of travel, EQ RC-PCS cartridge with low-speed compression and rebound adjustment, 27.5 Plus, Boost, Q-lock 15mm

MOTOR
Bosch, Performance Line CX BDU38, Smart System, 120 Nm

BATTERY
Bosch, PowerPack 540Wh, Smart System

ADDITIONNAL BATTERY
Bosch, PowerPack 540Wh, Smart System

REMOTE
Bosch, Purion 200, Smart System

CONDITIONS
Maximum distance, calculated for two 70kg riders in ideal conditions. Estimate your battery range .

CHARGER
Bosch, 4Ah

BCM
Not equipped with Bosch ConnectModule

RANGE AUTONOMY
150 km

REAR DERAILLEUR
Shimano, CUES, RD-U6000-GS, 10/11-speed

CHAINRING
FSA, Narrow Wide, 34 teeth

CASSETTE
Shimano, CUES, CS-LG300 10-speed, 11-48T

CHAIN
Shimano, LG500, 130 links

SHIFTER
Shimano, CUES, SL-U6000-10R, 10-speed

CRANKS
Tandem specific forged aluminum Moustache cranks, 170 mm, synchronized - Relay chainring narrow/wide 36 teeth

FRONT BRAKE
Magura, MT5, hydraulic disc, 4 pistons

REAR BRAKE
Magura, MT5, hydraulic disc, 4 pistons

FRONT ROTOR
Magura, Storm HC, 203mm

REAR ROTOR
Magura, Storm HC, 203mm

FRONT HUB
Moustache, 32H, 15x110mm, thru axle

REAR HUB
Moustache, 32H, 12x148mm, thru axle

FRONT RIM
Moustache, asymmetric, alloy 6061E, welded, double wall, 32 holes, 27.5", internal width 35mm, mounted with Tubeless valves & flap

REAR RIM
Moustache, asymmetric, alloy 6061E, welded, double wall, 32 holes, 27.5", internal width 35mm, mounted with Tubeless valves & flap

WHEELS
Moustache AL / Maxxis Rekon 27x2.8

FRONT TYRE
Maxxis, Rekon, 27.5x2.80

REAR TYRE
Maxxis, Rekon, 27.5x2.80

HANDLEBAR
Front: Moustache, ergonomic, alloy, 760mm, 9° backsweep // Rear : Moustache, ergonomic, alloy, 680mm, 9° backsweep

STEM
Front: Moustache, 3D forged alloy, 65mm // Rear: Moustache, 3D forged alloy, adjustable 155/200mm

HEADSET
FSA, No 57B-1

GRIPS
Ergonomic, dual-density

SADDLE
Moustache, Ergonomic

SEATPOST
Front: Moustache, alloy, 27.2mm with 31.6mm adaptor, 350mm // Rear: Suntour NCX, suspension seatpost with 50mm of travel, parallelogram system 350mm x 27.2mm with 31.6mm adaptor

SEATCLAMP
Moustache, alloy, 34.9mm

FRONT LIGHT
-

PEDALS
alloy platform with reflectors

SIZE
TU

COLOR
Stone Grey glossy

WEIGHT
30.8 kg

GVWR
200 kg

SAMEDI 27 X2 MTB

TA0CGU100260



WARRANTY

5 years frame and fork Moustache Bikes - 2 years motor, battery

Find this bike online

MOUSTACHE

SAMEDI 27 X2
MTB

TA0CGU100260



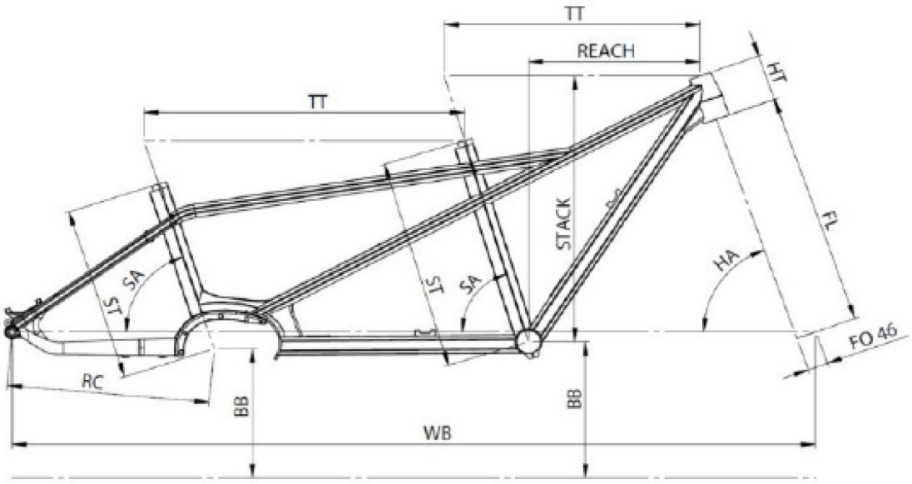

Samedi 27X2 / 27X2 TRK

ST - Taille / Size	mm	420 (Rear)	510 (Front)	
Taille utilisateur / User size	m	1,50 - 1,85	1,72 - 1,95	
TT - Tube supérieur / Top tube	mm	737	590	
RC - Bases / Rear center	mm	470		
HT - Douille de direction / Headtube	mm	110		
WB - Empattement / Wheelbase	mm	1850		
FL - Longueur de fourche / Fork length	mm	547		
BB - Hauteur de boitier / BB height	mm	310	325	
SA - Angle de selle / Seat angle	°	72	73	
HA - Angle de direction / Head angle	°	70,5		
Reach	mm	-	394	
Stack	mm	-	642	
SO - Enjambement / Standover	mm	703	800	

Find this bike online

MOUSTACHE