MARDI 27.6 FS 2026

MA6FML6EL260



Product specifications may change without notice. Non-contractual information.

FRAME
Mardi FS, aluminium, one-piece gravity cast, low stepover, increase rigidity thanks to internal ribs, unified rear swingarm, discreet internal cable routing, integrated battery and drive unit

FORK
SR Suntour, Mobie 34, lockout function, 100mm travel

SHOCK
Moustache, Magic Grip Control 115, specific Air Shock with 2-position platform and dynamic control of rebound, build-in 165x38mm, 115mm travel

MOTOR
Bosch, Performance Line CX, Smart System, 100 Nm

BATTERY
Bosch, PowerTube 600Wh, Smart System

DISPLAY
Bosch, Smartphone Grip

REMOTE
Bosch, Purion 200, Smart System

CONDITIONS
Maximum distance, calculated for a 70kg rider in ideal conditions. Estimate your battery range .

CHARGER
Bosch, 4Ah

BCM
Not equipped with Bosch ConnectModule

RANGE AUTONOMY
124 km

REAR DERAILLEUR
Enviolo

CHAINRING
Gates, 50T

CASSETTE
Gates, 22T

CHAIN
Gates, CDX belt, clean, smooth and resistant

SHIFTER
Enviolo, PURE, rotating handle with visual indicator

CRANKS
Stronglight, aluminium, 170mm, ISI

FRONT BRAKE
Magura, MTA2, hydraulic disc, 2 pistons

REAR BRAKE
Magura, MTA2, hydraulic disc, 2 pistons

FRONT ROTOR
Magura, MT A2, 180mm

REAR ROTOR
Magura, MT A2, 160mm

REAR HUB
Enviolo, Heavy Duty 380%, 32H, 12x148mm, nut

FRONT RIM
Alloy , 32 holes, 27.5', internal width 27 mm

REAR RIM
Alloy , 32 holes, 27.5', internal width 27 mm

WHEELS
Schwalbe, Super Moto-X, 27.5x2.40, Reflective

FRONT TYRE
Schwalbe, Super Moto-X, 27.5x2.40, Reflective

REAR TYRE
Schwalbe, Super Moto-X, 27.5x2.40, Reflective

HANDLEBAR
Moustache, ergonomic, alloy, 660mm, 30° backsweep

STEM
Moustache, alloy, adjustable, 110mm

HEADSET
Acros, AZF-699, sealed bearings, internal routing, blocklock

GRIPS
SB3, Ergonomic

SADDLE
Selle Royal, Essenza + moderate wide

SEATPOST
EXA, 900i, dropper-post w/remote lever, 31.6mm, 150mm

SEATCLAMP
Moustache, alloy, 34.9mm

FRONT LIGHT
AXA, NXT, 80 lux, powered by main battery

REAR LIGHT
Spanninga, Presto2Guard, powered by main battery

HORN
Spanninga Minibell Black

LOCK
Battery lock ABUS, Xplus, One-Key option.
Framelock Axa Block XXL.

KICKSTAND
Moustache, adjustable

MUDGUARD
Moustache, alloy, double wall design, w/alloy stays

CARRIER
Moustache, alloy, light, removable QL3 lateral fixation.
MIK platform option.

FRONT CARRIER
PB-KITOP

PEDALS
alloy platform with reflectors

MARDI 27.6 FS 2026

MA6FML6EL260



SIZE
L

COLOR
Earth metal

WEIGHT
29.1 kg

GVWR
160 kg

WARRANTY
5 years frame and fork Moustache Bikes - 2 years motor, battery

Find this bike online

MARDI 27.6 FS 2026

MA6FML6EL260



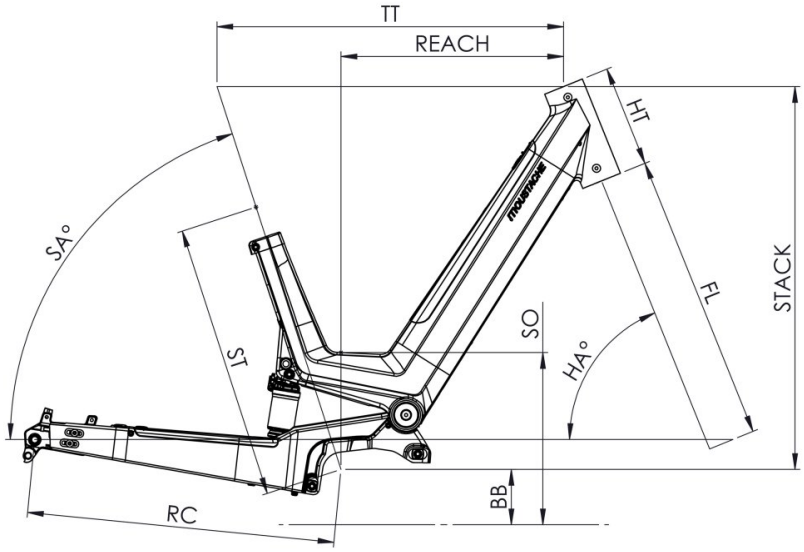

Mardi 27 FS

ST - Taille / Size	mm	(S)	(M)	(L)
Taille utilisateur / User size	m	1,55 - 1,72	1,65 - 1,85	1,80 - 1,95
ST - Tube de selle / Seat tube	m	410	460	460
TT - Tube supérieur / Top tube	mm	580	600	600
RC - Bases / Rear center	mm	515	515	515
HT - Douille de direction / Headtube	mm	170	180	180
WB - Empattement / Wheelbase	mm	1177	1198	1198
FL - Longueur de fourche / Fork length	mm	501.5	501.5	501.5
BB - Hauteur de boitier / BB height	mm	312	312	312
SA - Angle de selle / Seat angle	°	70.7	70.7	70.7
HA - Angle de direction / Head angle	°	67.2	67.2	67.2
Reach	mm	357	374	374
Stack	mm	644	654	654
SO - Enjambement / Standover	mm	507	507	507

Find this bike online

{TOUSTACHE