SAMEDI 27 OFF 4 2026

OF4CNM600260



Product specifications may change without notice. Non-contractual information.

FRAME
Xroad, 6061 T4-T6 alloy, variable thickness hydroformed tubes, Bosch PowerTube battery integration (horizontal), integrated cable routing

FORK
SR Suntour, XCR 34, lockout function, 120mm travel

MOTOR
Bosch, Performance Line CX BDU37, Smart System, 85Nm

BATTERY
Bosch, PowerTube 625Wh, horizontal, Smart System

REMOTE
Bosch, Purion 200, Smart System

CONDITIONS
Maximum distance, calculated for a 70kg rider in ideal conditions. Estimate your battery range .

CHARGER
Bosch, 4Ah

BCM
Not equipped with Bosch ConnectModule

RANGE AUTONOMY
107 km

REAR DERAILLEUR
Shimano, CUES, RD-U6020-11, 11-speed

CHAINRING
FSA, Narrow Wide, 34 teeth

CASSETTE
Shimano, CUES, CS-LG400 11-speed, 11-50T

CHAIN
Shimano, CN-LG500, 120 links

SHIFTER
Shimano, CUES, SL-U6000-11R, 11-speed

CRANKS
Moustache, forged aluminium, 165mm

FRONT BRAKE
Shimano, MT420, hydraulic disc, 4 pistons

REAR BRAKE
Shimano, MT410, hydraulic disc

FRONT ROTOR
Shimano, 203mm

REAR ROTOR
Shimano, 180mm

FRONT HUB
Moustache, 28H, 15x110mm, thru axle

REAR HUB
Moustache, 28H, 9x141mm

FRONT RIM
Alloy , 32 holes, 27.5', internal width 30 mm

REAR RIM
Alloy , 32 holes, 27.5', internal width 30 mm

WHEELS
Maxxis, Rekon, 27.5x2.60, foldable, EXO/TR (Tubeless Ready)

FRONT TYRE
Maxxis, Rekon, 27.5x2.60, foldable, EXO/TR (Tubeless Ready)

REAR TYRE
Maxxis, Rekon, 27.5x2.60, foldable, EXO/TR (Tubeless Ready)

HANDLEBAR
Moustache, alloy, 740mm, 15mm rise, 9° backsweep, 5° upsweep

STEM
Moustache, 3D forged Aluminum, 60mm

HEADSET
FSA, No 57B

GRIPS
SB3, Ergonomic

SADDLE
Selle Royal, Essenza Moderate Men

SEATPOST
Suspension, alloy, 31.6mm, 350mm, 40mm travel

SEATCLAMP
Moustache, alloy, 34.9mm

FRONT LIGHT
-

PEDALS
alloy platform with reflectors

SIZE
M

COLOR
Black glossy

WEIGHT
23.1 kg

GVWR
135 kg

WARRANTY
5 years frame and fork Moustache Bikes - 2 years motor, battery

Find this bike online

MOUSTACHE

SAMEDI 27
OFF 4 2026

OF4CNM600260



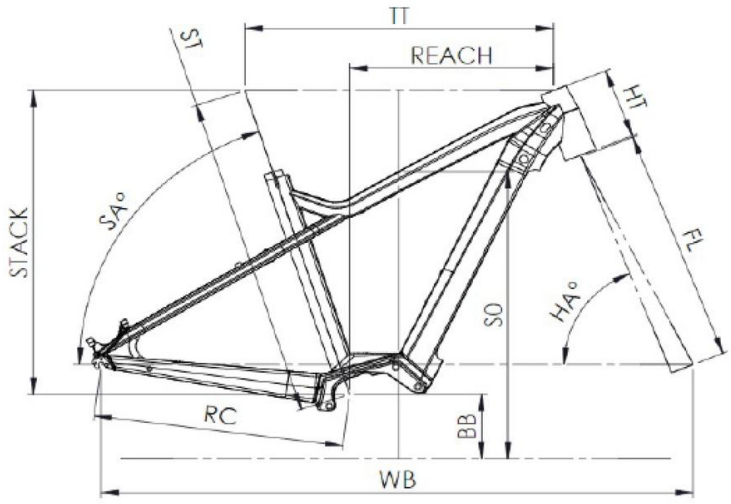

Off 4

ST - Taille / Size	mm	420 (S)	470 (M)	530 (L)	580 (XL)
Taille utilisateur / User size	m	1,55 - 1,70	1,68 - 1,83	1,80 - 1,95	1,90 - 2,05
TT - Tube supérieur / Top tube	mm	560	585	610	635
RC - Bases / Rear center	mm	475	475	475	475
HT - Douille de direction / Headtube	mm	140	140	150	160
WB - Empattement / Wheelbase	mm	1130	1148	1168	1193
FL - Longueur de fourche / Fork length	mm	519	519	519	519
BB - Hauteur de boitier / BB height	mm	321	321	321	321
SA - Angle de selle / Seat angle	°	70,5	70	70	70
HA - Angle de direction / Head angle	°	66	66,5	67	67
Reach	mm	343	361	382	405
Stack	mm	623	625	638	648
SO - Enjambement / Standover	mm	761	764	766	770

Find this bike online

{TOUSTACHE