DIMANCHE 28 ROAD 2 2025

DI28C0654240



Product specifications may change without notice. Non-contractual information.

FRAME
Dimanche 28, 6061 T4-T6 alloy, variable thickness hydroformed tubes, CompactTube integration and internal cable routing

FORK
Dimanche 28, full carbon, tapered steerer tube 1"1/8-1"1/2, FlatMount 160mm direct brake mount, 12x100mm axle, 50mm offset, for tires in 700x45, mounts for mudguard

MOTOR
Bosch, Performance Line SX, Smart System, 60Nm

BATTERY
Bosch, CompactTube 400Wh, Smart System

DISPLAY
Bosch, Kiox 300, Smart System

REMOTE
Bosch, System Controller and Mini Remote, Smart System

CONDITIONS
Maximum distance, calculated for a 70kg rider in ideal conditions. Estimate your battery range .

CHARGER
Bosch, 2Ah

RANGE AUTONOMY
116 km

REAR DERAILLEUR
SRAM, Apex XPLR AXS, 12-speed, electronic

CHAINRING
SRAM, Narrow-Wide, 44 teeth, chainguard

CASSETTE
SRAM, XPLR, PG-1231 12-speed, 11-44T

CHAIN
Sram, Apex, 12-speed, 120 links

CRANKS
FSA, forged aluminum, 170mm

FRONT BRAKE
SRAM, Apex AXS, hydraulic disc

REAR BRAKE
SRAM, Apex AXS, hydraulic disc

FRONT ROTOR
SRAM, Paceline, 160mm

REAR ROTOR
SRAM, Paceline, 160mm

FRONT HUB
Mavic, 24H, 12x100mm, thru axle

REAR HUB
Mavic, 24H, ID360, 12x142mm, thru axle

FRONT RIM
Mavic, Cosmic S 42 Disc, carbon, 24H, 700c, 21mm width, Tubeless compatible

REAR RIM
Mavic, Cosmic S 42 Disc, carbon, 24H, 700c, 21mm width, Tubeless compatible

FRONT TYRE
Schwalbe, Pro One, 700x34C, SuperRace, TLE

REAR TYRE
Schwalbe, Pro One, 700x34C, SuperRace, TLE

HANDLEBAR
Moustache, alloy, Road, drop 105, reach 65, flare 20°, 460mm

STEM
Moustache, 3D forged Aluminum, 90mm

HEADSET
Acros, AZF-725, sealed bearings, internal routing

GRIPS
Moustache bar tape

SADDLE
Selle Royal, SRX

SEATPOST
Moustache, alloy, 27.2mm, 350mm

SEATCLAMP
Moustache, alloy, 34.9mm

FRONT LIGHT
-

PEDALS
alloy platform with reflectors

SIZE
L

COLOR
Fir Green glossy

WEIGHT
15.7 kg

GVWR
120 kg

WARRANTY
5 years frame and fork Moustache Bikes - 2 years motor, battery

Find this bike online

MOUSTACHE

DIMANCHE 28
ROAD 2 2025

DI28C0654240



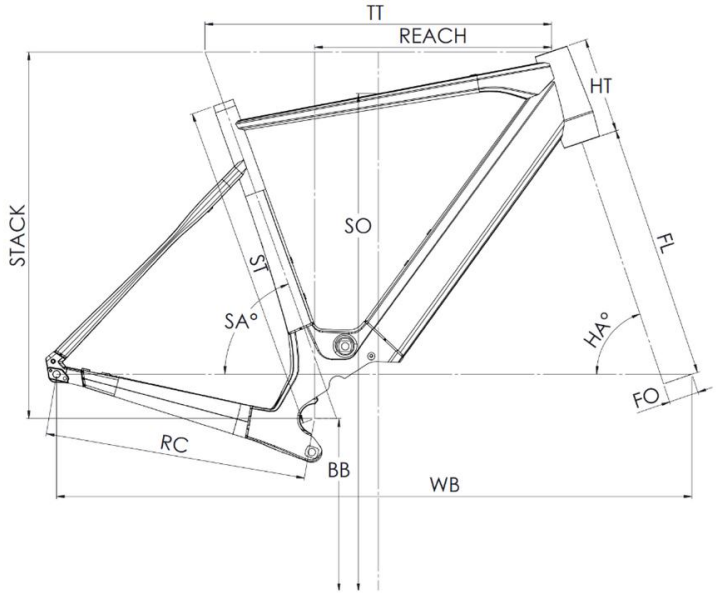

Dimanche 28 Road 2/4/6 - Dimanche 29 Gravel 2/4/6

ST - Taille / Size	mm	460 (S)	500 (M)	540 (L)	580 (XL)
Taille utilisateur / User size	m	1,53 - 1,68	1,66 - 1,81	1,79 - 1,94	1,92 - 2,07
TT - Tube supérieur / Top tube	mm	545	565	585	605
RC - Bases / Rear center	mm	437	437	437	437
HT - Douille de direction / Headtube	mm	120	135	160	180
WB - Empattement / Wheelbase	mm	1039	1049	1061	1071
FL - Longueur de fourche / Fork length	mm	415	415	415	415
BB - Hauteur de boitier / BB height	mm	288,5	288,5	288,5	288,5
SA - Angle de selle / Seat angle	°	73,3	73	72,8	72,5
HA - Angle de direction / Head angle	°	70	70,7	71,3	72
Reach	mm	375	386	395	405
Stack	mm	569	586	612	634
SO - Enjambement / Standover	mm	772	800	830	850

Find this bike online

TOUSTACHE