TRAIL 150.4
2025

TR4FTX700250



Product specifications may change without notice. Non-contractual information.

FRAME
Trail, 6061 T4-T6 alloy, w/150mm travel, Bosch PowerTube battery custom integration (horizontal), 12x148mm, Boost, motor cover w/cooling fins & chainguide

FORK
RockShox, PSYLO Silver RC, Solo Air spring w/ external rebound, Motion Control damping featuring low speed compression adjustment to lockout 150mm travel, 15x110mm, Boost, 44mm Offset, mini-fender compatible

SHOCK
Moustache, Magic Grip Control 150, specific Air Shock w/ 2-position platform and dynamic control of rebound, Trunion mount, build-in 205x60mm, 150mm travel

MOTOR
Bosch, Performance Line CX BDU37,Smart System, 85Nm

BATTERY
Bosch, PowerTube 750Wh, horizontal, Smart System

REMOTE
Bosch, Purion 200, Smart System

CONDITIONS
Maximum distance, calculated for a 70kg rider in ideal conditions. Estimate your battery range .

CHARGER
Bosch, 4Ah

BCM
Not equipped with Bosch ConnectModule

RANGE AUTONOMY
117 km

REAR DERAILLEUR
Shimano, XT, RD-M8100-SGS, 12-speed

CHAINRING
FSA, Narrow Wide, 34 teeth

CASSETTE
Shimano, Deore, CS-M6100 12-speed, 10-51T

CHAIN
Shimano, CN-M6100, 12-speed, 120 links

SHIFTER
Shimano, Deore, SL-M6100, 12-speed

CRANKS
Moustache, forged aluminium, 165mm

FRONT BRAKE
Magura, MT5, hydraulic disc, 4 pistons

REAR BRAKE
Magura, MT5, hydraulic disc, 4 pistons

FRONT ROTOR
Magura, MDR-C, 203mm

REAR ROTOR
Magura, MDR-C, 203mm

FRONT HUB
Shimano, 28H, 15x110mm, thru axle

REAR HUB
Shimano, 28H, 12x148mm, thru axle

FRONT RIM
Moustache, asymmetric, alloy 6061E, welded, double wall, 28 holes, 29", internal width 30mm, mounted with Tubeless valves & flap, brass nuts with locking "Blue Nylon" insert

REAR RIM
Moustache, asymmetric, alloy 6061E, welded, double wall, 28 holes, 29", internal width 30mm, mounted with Tubeless valves & flap, brass nuts with locking "Blue Nylon" insert

WHEELS
Moustache AL / Maxxis Rekon 29x2.4

FRONT TYRE
Maxxis, Rekon, 29x2.40, foldable, EXO/TR (Tubeless Ready)

REAR TYRE
Maxxis, Rekon, 29x2.40, foldable, EXO/TR (Tubeless Ready)

HANDLEBAR
Moustache, alloy, 760mm, 31.8mm, 12mm rise, 9° backsweep, 5° upsweep

STEM
Moustache, alloy, 3D forged, 40mm

HEADSET
FSA, N°55R/57, sealed bearings

GRIPS
SB3, Race

SADDLE
Moustache, Sport, steel rails

SEATPOST
EXA, 900i, dropper-post w/remote lever, 31.6mm, 170mm

SEATCLAMP
Moustache, alloy, 38.6mm

FRONT LIGHT
-

HORN
Spanninga Minibell Black

PEDALS
alloy platform with reflectors

SIZE
XL

COLOR
Black / Terracotta glossy

TRAIL 150.4
2025

TR4FTX700250



WEIGHT
25.1 kg

GVWR
140 kg

WARRANTY
5 years frame and fork Moustache Bikes - 2 years motor, battery

Find this bike online

MOUSTACHE

TRAIL 150.4
2025

TR4FTX700250



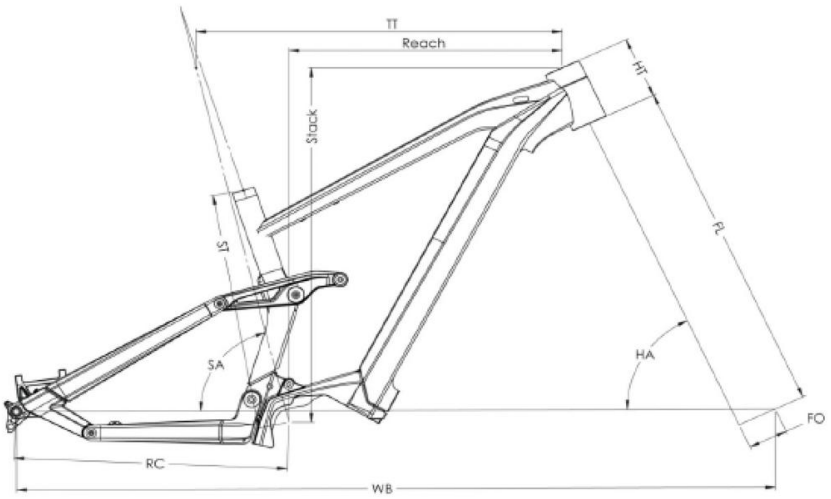

Trail 150.2 / 4

ST - Taille / Size	mm	390 (S)	420 (M)	450 (L)	480 (XL)
Taille utilisateur / User size	m	1,56 - 1,72	1,69 - 1,85	1,82 - 1,98	1,95 - 2,11
TT - Tube supérieur / Top tube	mm	588	618	643	668
RC - Bases / Rear center	mm	462	462	462	462
HT - Douille de direction / Headtube	mm	100	110	130	140
WB - Empattement / Wheelbase	mm	1218	1250	1279	1306
FL - Longueur de fourche / Fork length	mm	560	560	560	560
BB - Hauteur de boitier / BB height	mm	350	350	350	350
SA - Angle de selle / Seat angle	°	76,6	76,6	76,6	76,6
HA - Angle de direction / Head angle	°	65,6	65,6	65,6	65,6
Reach	mm	441	468	489	512
Stack	mm	623	632	650	659
SO - Enjambement / Standover	mm	836	845	863	873

Find this bike online

{TOUSTACHE