# XROAD FS 2 2026

XR2FBL50S260



Product specifications may change without notice. Non-contractual information.

**FRAME**
Xroad FS, aluminium, one-piece gravity cast, low stepover, increase rigidity thanks to internal ribs, unified rear swingarm, discreet internal cable routing, integrated battery and drive unit

**FORK**
SR Suntour, XCM32-ATB, LO, preload adjustment & lockout function, 100mm travel

**SHOCK**
Moustache, Magic Grip Control 115, specific Air Shock with 2-position platform and dynamic control of rebound, build-in 165x38mm, 115mm travel

**MOTOR**
Bosch, Performance Line BDU34, Smart System, 75Nm

**BATTERY**
Bosch, PowerTube 540Wh

**REMOTE**
Bosch, Purion 200, Smart System

**CONDITIONS**
Maximum distance, calculated for a 70kg rider in ideal conditions.  Estimate your battery range .

**CHARGER**
Bosch, 2Ah

**BCM**
Not equipped with Bosch ConnectModule

**RANGE AUTONOMY**
124 km

**REAR DERAILLEUR**
Shimano, CUES, RD-U3020, 9-speed

**CHAINRING**
Narrow-Wide, 40 teeth

**CASSETTE**
Shimano, CUES, CS-LG300 9-speed, 11-36T

**CHAIN**
Shimano, LG500, 130 links

**SHIFTER**
Shimano, CUES, SL-U4000-9R, 9-speed

**CRANKS**
Stronglight, aluminium, 170mm, ISI

**FRONT BRAKE**
Shimano, MT200, hydraulic disc

**REAR BRAKE**
Shimano, MT200, hydraulic disc

**FRONT ROTOR**
Shimano, 180mm

**REAR ROTOR**
Shimano, 180mm

**FRONT HUB**
Shimano, 32H, 9x100mm, QR (Quick Release)

**REAR HUB**
Shimano, 32H, 9x100mm, QR (Quick Release)

**FRONT RIM**
Alloy , 32 holes, 27.5', internal width 23 mm

**REAR RIM**
Alloy , 32 holes, 27.5', internal width 23 mm

**WHEELS**
Schwalbe, Smart Sam, 27.5x2.35, reflective

**FRONT TYRE**
Schwalbe, Smart Sam, 27.5x2.35, reflective

**REAR TYRE**
Schwalbe, Smart Sam, 27.5x2.35, reflective

**HANDLEBAR**
Moustache, ergonomic, alloy, 660mm, 30° backsweep

**STEM**
Moustache, alloy, adjustable, 110mm

**HEADSET**
Acros, AZF-699, sealed bearings, internal routing, blocklock

**GRIPS**
SB3, Ergonomic

**SADDLE**
Selle Royal, Essenza + moderate

**SEATPOST**
EXA, 900i, dropper-post w/remote lever, 31.6mm, 150mm

**SEATCLAMP**
Moustache, alloy, 34.9mm

**FRONT LIGHT**
AXA, NXT, 80 lux, powered by main battery

**REAR LIGHT**
Spanninga, Presto2Guard, powered by main battery

**HORN**
Spanninga Minibell Black

**LOCK**
Battery lock ABUS, Xplus, One-Key option. Framelock Axa Block XXL.

**KICKSTAND**
Moustache, adjustable

**MUDGUARD**
Moustache, alloy, double wall design, w/alloy stays

**CARRIER**
Moustache, alloy, suspended, removable QL3 lateral fixation, MIK HD platform

**FRONT CARRIER**
PB-KITOP

# XROAD FS 2 2026

XR2FBL50S260



**PEDALS**
alloy platform with reflectors

**SIZE**
L

**COLOR**
Marine blue mat

**WEIGHT**
29.4 kg

**GVWR**
135 kg

**WARRANTY**
5 years frame and fork Moustache Bikes - 2 years motor, battery

**Find this bike online**

MOUSTACHE

# XROAD FS 2
# 2026

XR2FBL50S260



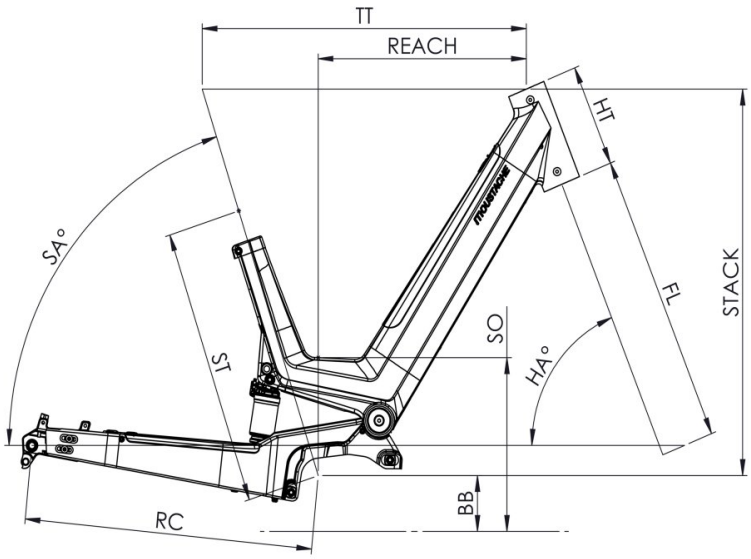


## Xroad FS / Samedi 27 OFF FS

| ST - Taille / Size | mm | (S) | (M) | (L) |
|---|---|---|---|---|
| Taille utilisateur / User size | m | 1,55 - 1,72 | 1,65 - 1,85 | 1,80 - 1,95 |
| ST - Tube de selle / Seat tube | m | 410 | 460 | 460 |
| TT - Tube supérieur / Top tube | mm | 580 | 600 | 600 |
| RC - Bases / Rear center | mm | 515 | 515 | 515 |
| HT - Douille de direction / Headtube | mm | 170 | 180 | 180 |
| WB - Empattement / Wheelbase | mm | 1190 | 1209 | 1209 |
| FL - Longueur de fourche / Fork length | mm | 527.5 | 527.5 | 527.5 |
| BB - Hauteur de boitier / BB height | mm | 324 | 324 | 324 |
| SA - Angle de selle / Seat angle | ° | 69.5 | 69.5 | 69.5 |
| HA - Angle de direction / Head angle | ° | 66 | 66 | 66 |
| Reach | mm | 344 | 361 | 361 |
| Stack | mm | 651 | 661 | 661 |
| SO - Enjambement / Standover | mm | 518 | 518 | 518 |

**Find this bike online**

MOUSTACHE