# SAMEDI 27 X2 TRK

TATCGU100260



Product specifications may change without notice. Non-contractual information.

**FRAME**
6061 T4-T6 alloy - Extruded & hydroformed variable thickness tubes - rear motor - tapered headtube - 27.5 Plus - 12x148mm Boost

**FORK**
SR Suntour, Aion 36, 140mm of travel, EQ RC-PCS cartridge with low-speed compression and rebound adjustment, 27.5 Plus, Boost, Q-lock 15mm

**MOTOR**
Bosch, Performance Line CX BDU38, Smart System, 120 Nm

**BATTERY**
Bosch, PowerPack 540Wh, Smart System

**ADDITIONNAL BATTERY**
Bosch, PowerPack 540Wh, Smart System

**REMOTE**
Bosch, Purion 200, Smart System

**CONDITIONS**
Maximum distance, calculated for two 70kg riders in ideal conditions.  Estimate your battery range .

**CHARGER**
Bosch, 4Ah

**BCM**
Not equipped with Bosch ConnectModule

**RANGE AUTONOMY**
206 km

**REAR DERAILLEUR**
Shimano, CUES, RD-U6000-GS, 10/11-speed

**CHAINRING**
FSA, Narrow Wide, 34 teeth

**CASSETTE**
Shimano, CUES, CS-LG300 10-speed, 11-48T

**CHAIN**
Shimano, LG500, 130 links

**SHIFTER**
Shimano, CUES, SL-U6000-10R, 10-speed

**CRANKS**
Tandem specific forged aluminum Moustache cranks, 170 mm, synchronized - Relay chainring narrow/wide 36 teeth

**FRONT BRAKE**
Magura, MT5, hydraulic disc, 4 pistons

**REAR BRAKE**
Magura, MT5, hydraulic disc, 4 pistons

**FRONT ROTOR**
Magura, Storm HC, 203mm

**REAR ROTOR**
Magura, Storm HC, 203mm

**FRONT HUB**
Moustache, 32H, 15x110mm, thru axle

**REAR HUB**
Moustache, 32H, 12x148mm, thru axle

**FRONT RIM**
Moustache, asymmetric, alloy 6061E, welded, double wall, 32 holes, 27.5", internal width 35mm

**REAR RIM**
Moustache, asymmetric, alloy 6061E, welded, double wall, 32 holes, 27.5", internal width 35mm

**WHEELS**
Moustache AL / Schwalbe Super Moto-X 27.5x2.4

**FRONT TYRE**
Schwalbe, Super Moto-X, 27.5x2.40

**REAR TYRE**
Schwalbe, Super Moto-X, 27.5x2.40

**HANDLEBAR**
Front: Moustache, ergonomic, alloy, 760mm, 9° backsweep // Rear : Moustache, ergonomic, alloy, 680mm, 9° backsweep

**STEM**
Front: Moustache, 3D forged alloy, 65mm // Rear: Moustache, 3D forged alloy, adjustable 155/200mm

**HEADSET**
FSA, No 57B-1

**GRIPS**
Ergonomic, dual-density

**SADDLE**
Moustache, Ergonomic

**SEATPOST**
Front: Moustache, alloy, 27.2mm with 31.6mm adaptor, 350mm // Rear: Suntour NCX, suspension seatpost with 50mm of travel, parallelogram system 350mm x 27.2mm with 31.6mm adaptor

**SEATCLAMP**
Moustache, alloy, 34.9mm

**FRONT LIGHT**
Trelock, Lighthammer, 100 lux, powered by main battery

**REAR LIGHT**
Spanninga, Presto2Guard, powered by main battery

**MUDGUARD**
Moustache, alloy, double wall design, w/alloy stays

**CARRIER**
Moustache, alloy, removable QL3 lateral fixation

**PEDALS**
alloy platform with reflectors

**SIZE**
TU

**COLOR**
Stone Grey glossy

**WEIGHT**
32.6 kg

# SAMEDI 27 X2 TRK

TATCGU100260



**GVWR**

200 kg

**WARRANTY**

5 years frame and fork Moustache Bikes - 2 years motor, battery

**Find this bike online**

# SAMEDI 27 X2 TRK

TATCGU100260



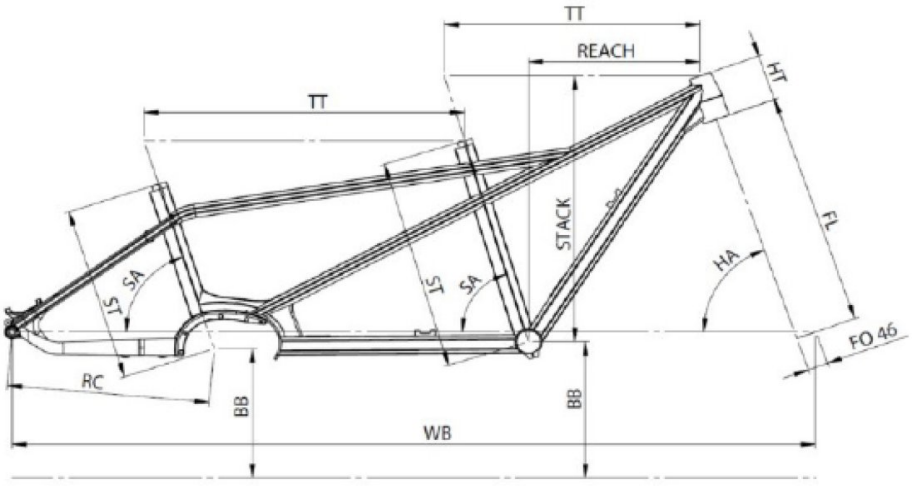


## Samedi 27X2 / 27X2 TRK

| ST - Taille / Size | mm | 420 (Rear) | 510 (Front) | |
|---|---|---|---|---|
| Taille utilisateur / User size | m | 1,50 - 1,85 | 1,72 - 1,95 | |
| TT - Tube supérieur / Top tube | mm | 737 | 590 | |
| RC - Bases / Rear center | mm | 470 | | |
| HT - Douille de direction / Headtube | mm | 110 | | |
| WB - Empattement / Wheelbase | mm | 1850 | | |
| FL - Longueur de fourche / Fork length | mm | 547 | | |
| BB - Hauteur de boitier / BB height | mm | 310 | 325 | |
| SA - Angle de selle / Seat angle | ° | 72 | 73 | |
| HA - Angle de direction / Head angle | ° | 70,5 | | |
| Reach | mm | - | 394 | |
| Stack | mm | - | 642 | |
| SO - Enjambement / Standover | mm | 703 | 800 | |

**Find this bike online**

MOUSTACHE