# SAMEDI 28.4 2025

S84ORL500250



Product specifications may change without notice. Non-contractual information.

**FRAME**
Samedi 28 Open, 6061 T4-T6 alloy, variable thickness hydroformed tubes, Bosch PowerTube battery integration (Vertical), integrated cable routing

**FORK**
SR Suntour, NEX-E25, HLO, preload adjustment & lockout function, 63mm travel

**MOTOR**
Bosch, Performance Line BDU33, Smart System, 75Nm

**BATTERY**
Bosch, PowerTube 500Wh, vertical, Smart System

**REMOTE**
Bosch, Purion 200, Smart System

**CONDITIONS**
Maximum distance, calculated for a 70kg rider in ideal conditions.  Estimate your battery range .

**CHARGER**
Bosch, 2Ah

**BCM**
Not equipped with Bosch ConnectModule

**RANGE AUTONOMY**
125 km

**REAR DERAILLEUR**
Shimano, CUES, RD-U6020, 10-speed

**CHAINRING**
Narrow-Wide, 40 teeth

**CASSETTE**
Shimano, CUES, CS-LG300 10-speed, 11-39T

**CHAIN**
Shimano, LG500, 120 links

**SHIFTER**
Shimano, CUES, SL-U6000-10R, 10-speed

**CRANKS**
Moustache, aluminium, 170mm moteur Gen3

**FRONT BRAKE**
Shimano, MT200 or Alhonga HJ-472, hydraulic disc brake

**REAR BRAKE**
Shimano, MT200 or Alhonga HJ-472, hydraulic disc brake

**FRONT ROTOR**
Shimano, 180mm or Alhonga, 180mm

**REAR ROTOR**
Shimano, 160mm or Alhonga, 160mm

**FRONT HUB**
Shimano, 32H, 9x100mm, QR (Quick Release)

**REAR HUB**
Shimano, 32H, 9x135mm, QR (Quick Release)

**FRONT RIM**
Moustache, asymmetric, alloy 6061E, welded, 32 holes, 28", internal width 23mm

**REAR RIM**
Moustache, asymmetric, alloy 6061E, welded, 32 holes, 28", internal width 23mm

**WHEELS**
Schwalbe, Big Apple, 700x50C

**FRONT TYRE**
Schwalbe, Big Apple, 700x50C

**REAR TYRE**
Schwalbe, Big Apple, 700x50C

**HANDLEBAR**
Moustache, ergonomic, alloy, 680mm, 25° backsweep

**STEM**
Moustache, alloy, adjustable, 90mm

**HEADSET**
FSA, No 57B-1

**GRIPS**
Ergonomic, dual-density

**SADDLE**
Selle Royal, Essenza + moderate

**SEATPOST**
Suspension, alloy, 31.6mm, 350mm, 40mm travel

**SEATCLAMP**
Moustache, alloy, 34.9mm

**FRONT LIGHT**
AXA, NXT, 30 lux, powered by main battery

**REAR LIGHT**
Spanninga, Presto2Guard, powered by main battery

**LOCK**
AXA, Block XXL, same key for framelock & battery lock

**KICKSTAND**
Moustache, adjustable

**MUDGUARD**
Moustache, alloy, double wall design, w/alloy stays

**CARRIER**
Moustache, alloy, removable QL3 lateral fixation, MIK HD platform

**PEDALS**
alloy platform with reflectors

**SIZE**
L

**COLOR**
Metalic red glossy

**WEIGHT**
26.2 kg

# SAMEDI 28.4 2025

S84ORL500250



**GVWR**

135 kg

**WARRANTY**

5 years frame and fork Moustache Bikes - 2 years motor, battery

**Find this bike online**

# SAMEDI 28.4
# 2025

S84ORL500250



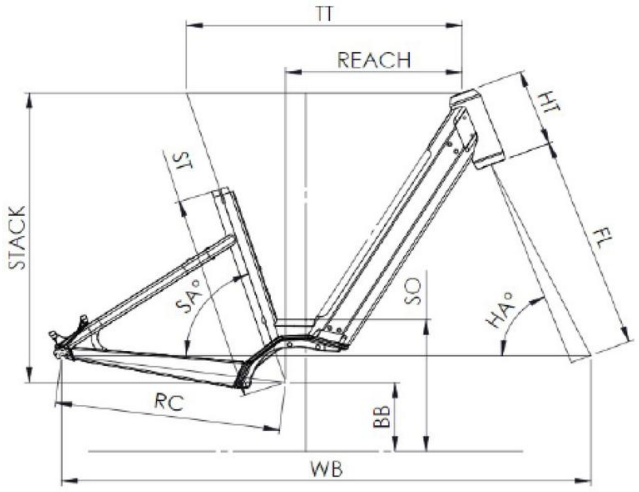


## Samedi 28 ES / 28.4

| ST - Taille / Size | mm | 420 (S) | 470 (M) | 530 (L) | 580 (XL) |
|---|---|---|---|---|---|
| Taille utilisateur / User size | m | 1,55 - 1,70 | 1,68 - 1,83 | 1,80 - 1,95 | 1,90 - 2,05 |
| TT - Tube supérieur / Top tube | mm | 560 | 585 | 610 | 635 |
| RC - Bases / Rear center | mm | 475 | 475 | 475 | 475 |
| HT - Douille de direction / Headtube | mm | 170 | 170 | 170 | 190 |
| WB - Empattement / Wheelbase | mm | 1106 | 1121 | 1147 | 1173 |
| FL - Longueur de fourche / Fork length | mm | 477 | 477 | 477 | 477 |
| BB - Hauteur de boitier / BB height | mm | 305 | 305 | 305 | 305 |
| SA - Angle de selle / Seat angle | ° | 71,5 | 71,5 | 71,5 | 71,5 |
| HA - Angle de direction / Head angle | ° | 67,7 | 68,5 | 68,5 | 68,5 |
| Reach | mm | 347 | 371 | 396 | 415 |
| Stack | mm | 644 | 644 | 644 | 644 |
| SO - Enjambement / Standover | mm | 770 | 774 | 782 | 786 |

**Find this bike online**

MOUSTACHE