# XROAD 6

XR6OVM800270



Product specifications may change without notice. Non-contractual information.

**FRAME**
Xroad Open, 6061 T4-T6 alloy, hydroformed tubes and extruded triple cavity tubes for optimal stiffness, Bosch PowerTube battery integration, integrated cable routing

**FORK**
SR Suntour, XCR 34, lockout function, 120mm travel

**MOTOR**
Bosch, Performance Line CX BDU38, Smart System, 120 Nm

**BATTERY**
Bosch, PowerTube 800Wh, Smart System

**DISPLAY**
Bosch, Kiox 500, Smart System

**REMOTE**
Bosch, LED remote Bluetooth

**CONDITIONS**
Maximum distance, calculated for a 70kg rider in ideal conditions.  Estimate your battery range .

**CHARGER**
Bosch, 4Ah

**BCM**
Not equipped with Bosch ConnectModule

**RANGE AUTONOMY**
167 km

**REAR DERAILLEUR**
Shimano, CUES, RD-U6000-GS, 10/11-speed

**CHAINRING**
Narrow-Wide, 38 teeth

**CASSETTE**
Shimano, CUES, CS-LG400 11-speed, 11-50T

**CHAIN**
Shimano, LG500, 108 links

**SHIFTER**
Shimano, CUES, SL-U6000-11R, 11-speed

**CRANKS**
Stronglight, aluminium, 170mm, ISI

**FRONT BRAKE**
Magura, Louise Elite Leisure, hydraulic disc, 4 pistons

**REAR BRAKE**
Magura, Louise Elite Leisure, hydraulic disc, 4 pistons

**FRONT ROTOR**
Magura, MDR-C, 180mm

**REAR ROTOR**
Magura, MDR-C, 180mm

**FRONT HUB**
Shimano, 32H, 15x110mm, thru axle

**REAR HUB**
Shimano, 32H, 9x135mm, QR (Quick Release)

**FRONT RIM**
Alloy , 32 holes, 27.5', internal width 27 mm

**REAR RIM**
Alloy , 32 holes, 27.5', internal width 27 mm

**WHEELS**
Schwalbe, Smart Sam, 27.5x2.35, reflective

**FRONT TYRE**
Schwalbe, Smart Sam, 27.5x2.35, reflective

**REAR TYRE**
Schwalbe, Smart Sam, 27.5x2.35, reflective

**HANDLEBAR**
Moustache, ergonomic, alloy, 660mm, 30° backsweep

**STEM**
Moustache, alloy, adjustable, 90mm

**HEADSET**
Acros, AZF-699, sealed bearings, internal routing, blocklock

**GRIPS**
SB3, Ergonomic

**SADDLE**
Selle Royal, Essenza + moderate

**SEATPOST**
EXA, 860i, suspension dropper-post w/remote lever, 31.6mm, 125mm

**SEATCLAMP**
Moustache, alloy, 34.9mm

**FRONT LIGHT**
AXA, NXT, 80 lux, powered by main battery

**REAR LIGHT**
High-intensity LED integrated reflector, powered by main battery

**HORN**
Spanninga Minibell Black

**LOCK**
ABUS, 6950ML, same key for framelock & battery lock. One-Key option.

**KICKSTAND**
Moustache, adjustable

**MUDGUARD**
Moustache, alloy, double wall design, w/alloy stays

**CARRIER**
Moustache, alloy, removable QL3 lateral fixation, MIK HD platform. Moustache protect option.

**FRONT CARRIER**
PB-KITOP

**PEDALS**
alloy platform with reflectors

# XROAD 6

XR6OVM800270



**SIZE**
M

**COLOR**
Oak green metalic

**WEIGHT**
27.1 kg

**GVWR**
160 kg

**WARRANTY**
5 years frame and fork Moustache Bikes - 2 years motor, battery

**Find this bike online**

MOUSTACHE

# XROAD 6

XR6OVM800270



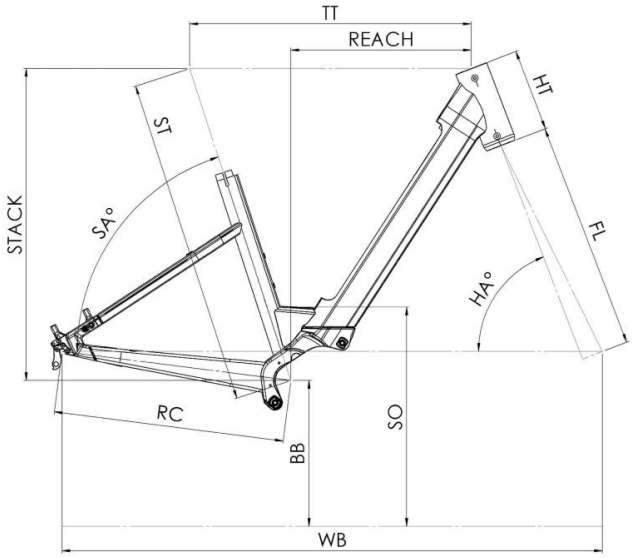


## Xroad 2 / 4 / 6 / 4 800Wh / 6 800Wh Open

| ST - Taille / Size | mm | 390 (S) | 450 (M) | 510 (L) | 550 (XL) |
|---|---|---|---|---|---|
| Taille utilisateur / User size | m | 1,49 - 1,61 | 1,59 - 1,76 | 1,74 - 1,92 | 1,90 - 2,05 |
| TT - Tube supérieur / Top tube | mm | 557 | 580 | 610 | 645 |
| RC - Bases / Rear center | mm | 475 | 475 | 475 | 475 |
| HT - Douille de direction / Headtube | mm | 170 | 170 | 190 | 210 |
| WB - Empattement / Wheelbase | mm | 1122 | 1134 | 1166 | 1202 |
| FL - Longueur de fourche / Fork length | mm | 527,5 | 527,5 | 527,5 | 527,5 |
| BB - Hauteur de boitier / BB height | mm | 300 | 300 | 300 | 300 |
| SA - Angle de selle / Seat angle | ° | 70,8 | 70,8 | 70,8 | 70,8 |
| HA - Angle de direction / Head angle | ° | 65,3 | 66,2 | 66,2 | 66,2 |
| Reach | mm | 320,0 | 342,0 | 365,0 | 394,0 |
| Stack | mm | 677 | 682 | 701 | 720 |
| SO - Enjambement / Standover | mm | 140 | 140 | 140 | 140 |

**Find this bike online**

MOUSTACHE