SAMEDI 28 ES

S81ONM500270



Product specifications may change without notice. Non-contractual information.

FRAME
Samedi 28 Open, 6061 T4-T6 alloy, hydroformed tubes and extruded triple cavity tubes for optimal stiffness, Bosch PowerTube battery integration, integrated cable routing

FORK
SR Suntour, NVX30, 80mm travel

MOTOR
Bosch, Active Line Plus BDU34, Smart System, 60 Nm

BATTERY
Bosch, PowerTube 540Wh

REMOTE
Bosch, Purion 200, Smart System

CONDITIONS
Maximum distance, calculated for a 70kg rider in ideal conditions. Estimate your battery range .

CHARGER
Bosch, 2Ah

BCM
Not equipped with Bosch ConnectModule

RANGE AUTONOMY
132 km

REAR DERAILLEUR
Shimano, CUES, RD-U3020, 9-speed

CHAINRING
Narrow-Wide, 40 teeth

CASSETTE
Sunrace, CSU98.9AW, 9-speed, 11-36T

CHAIN
Shimano, LG500, 108 links

SHIFTER
Shimano, CUES, SL-U4000-9R, 9-speed

CRANKS
Stronglight, aluminium, 170mm, ISI

FRONT BRAKE
Shimano, MT200, hydraulic disc

REAR BRAKE
Shimano, MT200, hydraulic disc

FRONT ROTOR
Shimano, 180mm

REAR ROTOR
Shimano, 160mm

FRONT HUB
Shimano, 32H, 9x100mm, QR (Quick Release)

REAR HUB
Shimano, 32H, 9x135mm, QR (Quick Release)

FRONT RIM
Alloy , 32 holes, 29", internal width 23 mm

REAR RIM
Alloy , 32 holes, 29", internal width 23 mm

WHEELS
Schwalbe, Big Apple, 700x50C

FRONT TYRE
Schwalbe, Big Apple, 700x50C, Reflective

REAR TYRE
Schwalbe, Big Apple, 700x50C, Reflective

HANDLEBAR
Moustache, ergonomic, alloy, 80mm rise

HEADSET
Acros, AZF-699, sealed bearings, internal routing, blocklock

GRIPS
SB3, Ergonomic

SADDLE
Selle Royal, Wave

SEATPOST
Moustache, alloy, 31.6mm, 350mm

SEATCLAMP
Moustache, alloy, 34.9mm

FRONT LIGHT
AXA, Globe, 40 lux, powered by main battery

REAR LIGHT
High-intensity LED integrated reflector, powered by main battery

HORN
Spanninga Minibell Black

LOCK
-

KICKSTAND
Moustache, adjustable

MUDGUARD
Moustache, alloy, double wall design, w/alloy stays

CARRIER
Moustache, alloy, removable QL3 lateral fixation, MIK HD platform. Moustache protect option.

FRONT CARRIER
PB-KITOP

PEDALS
alloy platform with reflectors

SIZE
M

COLOR
Black glossy

WEIGHT
26.5 kg

SAMEDI 28 ES

S81ONM500270



GVWR

135 kg

WARRANTY

5 years frame and fork Moustache Bikes - 2 years motor, battery

Find this bike online

SAMEDI 28 ES

S81ONM500270



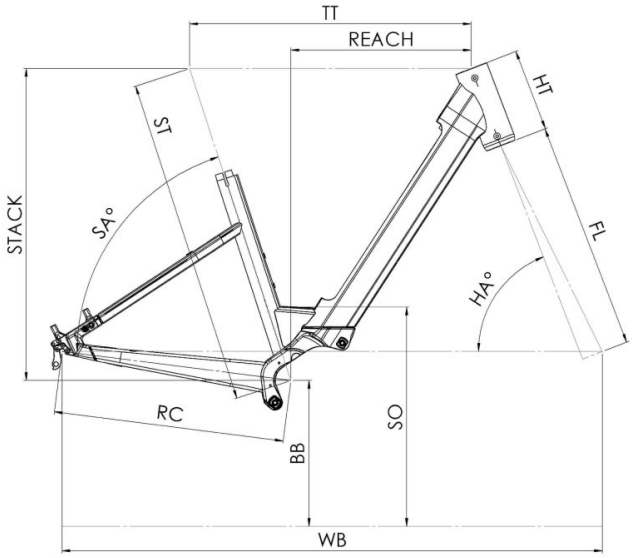

Samedi 28 MY27

ST - Taille / Size	mm	390 (S)	450 (M)	510 (L)	550 (XL)
Taille utilisateur / User size	m	1,49 - 1,61	1,59 - 1,76	1,74 - 1,92	1,90 - 2,05
BB Drop	mm	60	60	60	60
RC - Bases / Rear center	mm	475	475	475	475
HT - Douille de direction / Headtube	mm	170	170	190	210
WB - Empattement / Wheelbase	mm	1106	1120	1151	1187
FL - Longueur de fourche / Fork length	mm	480	480	480	480
BB - Hauteur de boitier / BB height	mm	301	301	301	301
SA - Angle de selle / Seat angle	°	71,6	71,6	71,6	71,6
HA - Angle de direction / Head angle	°	67,5	67,5	67,5	67,5
Reach	mm	343,8	365,5	389,4	418,4
Stack	mm	646,3	650,3	669,0	687,7
Tyre Diameter - WH	"	28	28	28	28
FO - Fork Offset	mm	46	46	46	46

Find this bike online

MOUSTACHE