TRAIL 150.4 2025

TR4FJX7E0250



Product specifications may change without notice. Non-contractual information.

FRAME

Trail, 6061 T4-T6 alloy, w/150mm travel, Bosch PowerTube battery custom integration (horizontal), 12x148mm, Boost, motor cover w/cooling fins & chainguide

FORK

RockShox, PSYLO Silver RC, Solo Air spring w/ external rebound, Motion Control damping featuring low speed compression adjustment to lockout 150mm travel, 15x110mm, Boost, 44mm Offset, mini-fender compatible

SHOCK

Moustache, Magic Grip Control 150, specific Air Shock w/ 2-position platform and dynamic control of rebound, Trunion mount, build-in 205x60mm, 150mm travel

MOTOR

Bosch, Performance Line CX BDU37,Smart System, 85Nm

BATTERY

Bosch, PowerTube 750Wh, horizontal, Smart System

REMOTE

Bosch, Purion 200, Smart System

CONDITIONS

Maximum distance, calculated for a 70kg rider in ideal conditions. Estimate your battery range .

CHARGER

Bosch, 4Ah

BCM

Not equipped with Bosch ConnectModule

RANGE AUTONOMY

117 km

REAR DERAILLEUR

Shimano, XT, RD-M8100-SGS, 12-speed

CHAINRING

FSA, Narrow Wide, 34 teeth

CASSETTE

Shimano, Deore, CS-M6100 12-speed, 10-51T

CHAIN

Shimano, CN-M6100, 12-speed, 120 links

SHIFTER

Shimano, Deore, SL-M6100, 12-speed

CRANKS

Moustache, forged aluminium, 165mm

FRONT BRAKE

Magura, MT5, hydraulic disc, 4 pistons

REAR BRAKE

Magura, MT5, hydraulic disc, 4 pistons

FRONT ROTOR

Magura, MDR-C, 203mm

REAR ROTOR

Magura, MDR-C, 203mm

FRONT HUB

Shimano, 28H, 15x110mm, thru axle

REAR HUB

Shimano, 28H, 12x148mm, thru axle

FRONT RIM

Moustache, asymmetric, alloy 6061E, welded, double wall, 28 holes, 29", internal width 30mm, mounted with Tubeless valves & flap, brass nuts with locking "Blue Nylon" insert

REAR RIM

Moustache, asymmetric, alloy 6061E, welded, double wall, 28 holes, 29", internal width 30mm, mounted with Tubeless valves & flap, brass nuts with locking "Blue Nylon" insert

WHEELS

Moustache AL / Maxxis Rekon 29x2.4

FRONT TYRE

Maxxis, Rekon, 29x2.40, foldable, EXO/TR (Tubeless Ready)

REAR TYRE

Maxxis, Rekon, 29x2.40, foldable, EXO/TR (Tubeless Ready)

HANDLEBAR

Moustache, alloy, 760mm, 31.8mm, 12mm rise, 9° backsweep, 5° upsweep

STEM

Moustache, alloy, 3D forged, 40mm

HEADSET

Acros, AZF-725, sealed bearings, internal routing

GRIPS

SB3, Race

SADDLE

Moustache, Sport, steel rails

SEATPOST

EXA, 900i, dropper-post w/remote lever, 31.6mm, 170mm

SEATCLAMP

Moustache, alloy, 38.6mm

FRONT LIGHT

Trelock, Lighthammer, 80 lux, powered by main battery

REAR LIGHT

Spanninga, Presto2Guard, powered by main battery

KICKSTAND

Moustache, adjustable

MUDGUARD

Moustache, stable and perfect protection thanks to the integrated mudflap

CARRIER

Moustache, alloy, light, removable QL3 lateral fixation

TRAIL 150.4 2025

TR4FJX7E0250



PEDALS
alloy platform with reflectors

COLOR
Black / ocker glossy

GVWR
140 kg

SIZE
XL

WEIGHT
26.9 kg

WARRANTY
5 years frame and fork Moustache Bikes - 2 years motor, battery

Find this bike online

MOUSTACHE

TRAIL 150.4
2025

TR4FJX7E0250



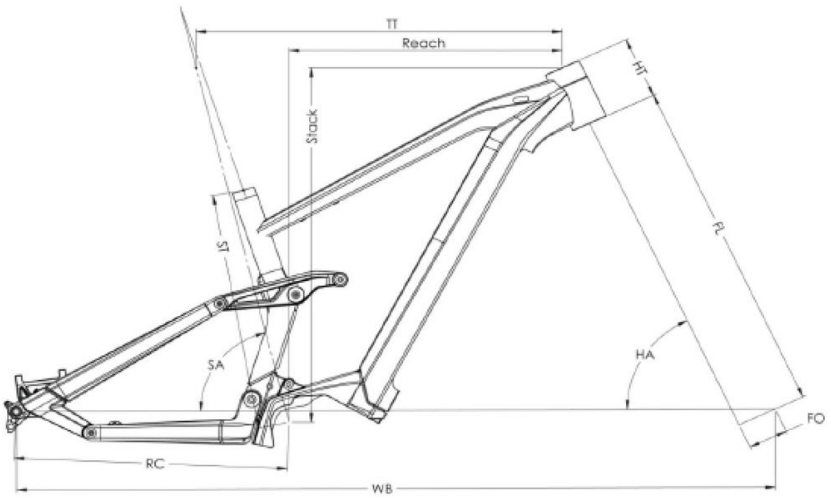

Trail 150.2 / 4

ST - Taille / Size	mm	390 (S)	420 (M)	450 (L)	480 (XL)
Taille utilisateur / User size	m	1,56 - 1,72	1,69 - 1,85	1,82 - 1,98	1,95 - 2,11
TT - Tube supérieur / Top tube	mm	588	618	643	668
RC - Bases / Rear center	mm	462	462	462	462
HT - Douille de direction / Headtube	mm	100	110	130	140
WB - Empattement / Wheelbase	mm	1218	1250	1279	1306
FL - Longueur de fourche / Fork length	mm	560	560	560	560
BB - Hauteur de boitier / BB height	mm	350	350	350	350
SA - Angle de selle / Seat angle	°	76,6	76,6	76,6	76,6
HA - Angle de direction / Head angle	°	65,6	65,6	65,6	65,6
Reach	mm	441	468	489	512
Stack	mm	623	632	650	659
SO - Enjambement / Standover	mm	836	845	863	873

Find this bike online

TOUSTACHE