LUNDI 27 ES 2026

L71OJU500260



Product specifications may change without notice. Non-contractual information.

FRAME
Lundi 27 low step-over, 6061 T4-T6 alloy, hydroformed and extruded triple cavity tubes for optimal stiffness. Exclusive integration of the Bosch PowerTube battery (Vertical), integrated cable routing

FORK
Lundi, alloy w/integrated cable routing and custom front carrier attachments

MOTOR
Bosch, Active Line Plus, Smart System, 50Nm

BATTERY
Bosch, PowerTube 500Wh, vertical, Smart System

REMOTE
Bosch, Purion 200, Smart System

CONDITIONS
Maximum distance, calculated for a 70kg rider in ideal conditions. Estimate your battery range .

CHARGER
Bosch, 2Ah

RANGE AUTONOMY
120 km

REAR DERAILLEUR
Shimano, Deore, RD-M4120-SGS, 10-11-speed

CHAINRING
Narrow-Wide, 40 teeth

CASSETTE
Shimano, CS-HG50, 10-speed, 11-36T

CHAIN
KMC, X10, 10-speed, 120 links

SHIFTER
Shimano, Deore, SL-M4100-R, 10-speed

CRANKS
Moustache, aluminium, 170mm moteur Gen3

FRONT BRAKE
Shimano, MT200, hydraulic disc

REAR BRAKE
Shimano, MT200, hydraulic disc

FRONT ROTOR
Shimano, 180mm

REAR ROTOR
Shimano, 160mm

FRONT HUB
Shimano, 32H, 9x100mm, QR (Quick Release)

REAR HUB
Shimano, 32H, 9x135mm, QR (Quick Release)

FRONT RIM
Moustache, asymmetric, alloy 6061E, welded, 32 holes, 27.5", internal width 23mm

REAR RIM
Moustache, asymmetric, alloy 6061E, welded, 32 holes, 27.5", internal width 23mm

WHEELS
Schwalbe, Super Moto-X, 27.5x2.40, Reflective

FRONT TYRE
Schwalbe, Super Moto-X, 27.5x2.40

REAR TYRE
Schwalbe, Super Moto-X, 27.5x2.40

HANDLEBAR
Moustache, Lundi custom ergonomic, alloy

HEADSET
FSA, No 28/41 integrated

GRIPS
Ergonomic, dual-density

SADDLE
Selle Royal, Wave

SEATPOST
Suspension, alloy, 31.6mm, 350mm, 40mm travel

SEATCLAMP
Moustache, alloy, 34.9mm

FRONT LIGHT
Spanninga, integrated, 30 lux, powered by main battery

REAR LIGHT
Spanninga, Presto2Guard, powered by main battery

LOCK
-

KICKSTAND
Moustache, adjustable

MUDGUARD
Moustache, alloy, double wall design, w/alloy stays

CARRIER
Moustache, alloy, removable QL3 lateral fixation, MIK HD platform

FRONT CARRIER
Optional extra: Moustache, Alloy, compatible with MIK bags and accessories

PEDALS
alloy platform with reflectors

SIZE
TU

COLOR
Curry Glossy

WEIGHT
26.2 kg

GVWR
150 kg

WARRANTY
5 years frame and fork Moustache Bikes - 2 years motor, battery

Find this bike online

MOUSTACHE

LUNDI 27 ES 2026

L71OJU500260



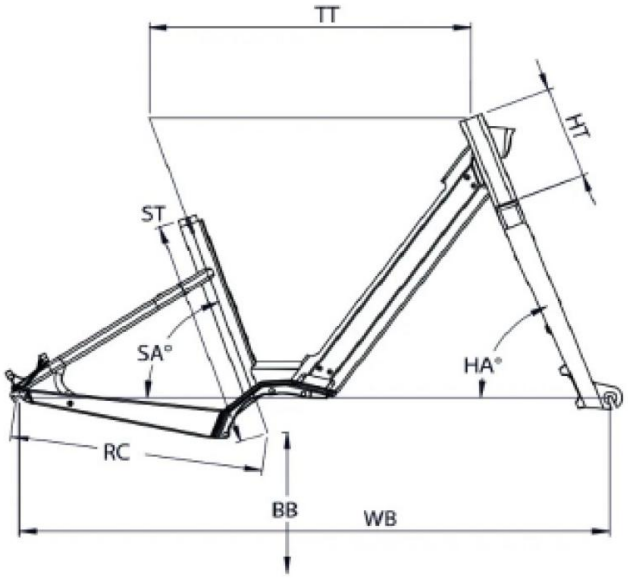

Lundi 27 ES / 27.3 / 27.4

ST - Taille / Size	mm	460
Taille utilisateur / User size	m	1,57 - 1,90
TT - Tube supérieur / Top tube	mm	615
RC - Bases / Rear center	mm	480
HT - Douille de direction / Headtube	mm	185
WB - Empattement / Wheelbase	mm	1129
BB - Hauteur de boitier / BB height	mm	285
SA - Angle de selle / Seat angle	°	70,4
HA - Angle de direction / Head angle	°	69
SO - Enjambement / Standover	mm	427

Find this bike online

MOUSTACHE