# LUNDI 27 LIMITED EDITION

L7LOBM300270



Product specifications may change without notice. Non-contractual information.

**FRAME**
Lundi 27 low step-over, 6061 T4-T6 alloy, hydroformed and extruded triple cavity tubes for optimal stiffness.

**FORK**
Lundi, alloy w/integrated cable routing and custom front carrier attachments

**MOTOR**
Bosch, Hub Line BDU30, Smart System, 45 Nm

**BATTERY**
Bosch, PowerTube 360Wh, Smart System

**DISPLAY**
Bosch, Smartphone Grip

**REMOTE**
Bosch, Purion 200, Smart System

**CONDITIONS**
Maximum distance, calculated for a 70kg rider in ideal conditions.  Estimate your battery range .

**CHARGER**
Bosch, 4Ah

**BCM**
Equipped with Bosch ConnectModule

**RANGE AUTONOMY**
70 km

**AUTONOMY**
4h

**REAR DERAILLEUR**
Shimano, CUES, RD-U6020, 10-speed

**CHAINRING**
Kit 40 tooth chainring, Narrow Wide & Magan 170mm cranks

**CASSETTE**
Shimano, CUES, CS-LG300 10-speed, 11-39T

**CHAIN**
Shimano, 118 links

**SHIFTER**
Shimano, CUES, RD-U6020, 10-speed

**CRANKS**
BB E-type, Stronglight, 73mm, 131mm

**FRONT BRAKE**
Shimano, MT200, hydraulic disc

**REAR BRAKE**
Shimano, MT200, hydraulic disc

**FRONT ROTOR**
Shimano, 180mm

**REAR ROTOR**
Shimano, 160mm

**FRONT HUB**
Shimano, 32H, 9x100mm, QR (Quick Release)

**REAR HUB**
Bosch, Hub Line BDU30, Smart System, 45 Nm

**FRONT RIM**
Alloy , 32 holes, 27.5', internal width 23 mm

**REAR RIM**
Alloy , 32 holes, 27.5', internal width 23 mm

**WHEELS**
Schwalbe, Super Moto-X, 27.5x2.40, Reflective

**FRONT TYRE**
Schwalbe, Super Moto-X, 27.5x2.40, Reflective

**REAR TYRE**
Schwalbe, Super Moto-X, 27.5x2.40, Reflective

**HANDLEBAR**
Moustache, Lundi custom ergonomic, alloy

**HEADSET**
FSA, No 28/41 integrated

**GRIPS**
SB3, Ergonomic

**SADDLE**
Selle Royal, Essenza + moderate wide

**SEATPOST**
Suspension, alloy, 31.6mm, 350mm, 40mm travel

**SEATCLAMP**
Moustache, alloy, 34.9mm

**FRONT LIGHT**
Spanninga, integrated, 30 lux, powered by main battery

**REAR LIGHT**
High-intensity LED integrated reflector, powered by main battery

**HORN**
Spanninga Minibell Black

**LOCK**
ABUS, 4650SL,, same key for framelock & battery lock

**KICKSTAND**
Moustache, adjustable

**MUDGUARD**
Moustache, alloy, double wall design, w/alloy stays

**CARRIER**
Moustache, alloy, removable QL3 lateral fixation, MIK HD platform. Moustache protect option.

**FRONT CARRIER**
CA-KIT04

**PEDALS**
alloy platform with reflectors

**SIZE**
M

# LUNDI 27 LIMITED EDITION

L7LOBM300270



**COLOR**
Chromatic Blue glossy

**GVWR**
150 kg

**WEIGHT**
24.2 kg

**WARRANTY**
5 years frame and fork Moustache Bikes - 2 years motor, battery

**Find this bike online**

MOUSTACHE

# LUNDI 27 LIMITED EDITION

L7LOBM300270



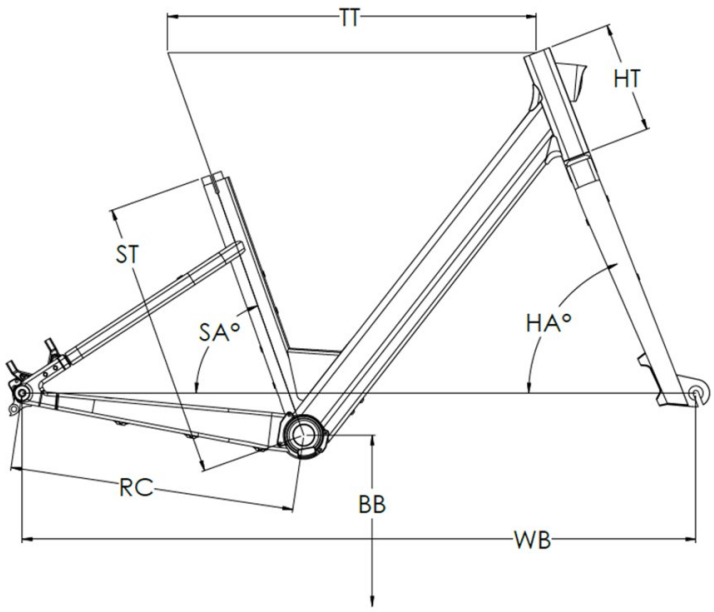


## Lundi 27 Hub

| ST - Taille / Size | mm | 390 (XS/S) | 460 (M/L) |
|---|---|---|---|
| Taille utilisateur / User size | m | 1,55 - 1,65 | 1,62 - 1,90 |
| TT - Tube supérieur / Top tube | mm | 615 | 615 |
| RC - Bases / Rear center | mm | 480 | 480 |
| HT - Douille de direction / Headtube | mm | 185 | 185 |
| WB - Empattement / Wheelbase | mm | 1129 | 1129 |
| FL - Longueur de fourche / Fork length | mm | 438,5 | 438,5 |
| BB - Hauteur de boitier / BB height | mm | 285 | 285 |
| SA - Angle de selle / Seat angle | ° | 70,4 | 70,4 |
| HA - Angle de direction / Head angle | ° | 69 | 69 |
| Reach | mm | 388 | 388 |
| Stack | mm | 637 | 637 |
| SO - Enjambement / Standover | mm | 427 | 427 |

**Find this bike online**

MOUSTACHE