XROAD ES 2026

XR1OBM500260



Product specifications may change without notice. Non-contractual information.

FRAME
Xroad Open, 6061 T4-T6 alloy, variable thickness hydroformed tubes, Bosch PowerTube battery integration (vertical), integrated cable routing

FORK
SR Suntour, XCM32-ATB, LO, preload adjustment & lockout function, 100mm travel

MOTOR
Bosch, Active Line Plus, Smart System, 50Nm

BATTERY
Bosch, PowerTube 500Wh, vertical, Smart System

REMOTE
Bosch, Purion 200, Smart System

CONDITIONS
Maximum distance, calculated for a 70kg rider in ideal conditions. Estimate your battery range .

CHARGER
Bosch, 2Ah

BCM
Not equipped with Bosch ConnectModule

RANGE AUTONOMY
125 km

REAR DERAILLEUR
Shimano, CUES, RD-U3020, 9-speed

CHAINRING
Narrow-Wide, 40 teeth

CASSETTE
Shimano, CUES, CS-LG300 9-speed, 11-36T

CHAIN
Shimano, CN-LG500, 120 links

SHIFTER
Shimano, CUES, SL-U4000-9R, 9-speed

CRANKS
Moustache, aluminium, 170mm moteur Gen3

FRONT BRAKE
Shimano, MT200, hydraulic disc

REAR BRAKE
Shimano, MT200, hydraulic disc

FRONT ROTOR
Shimano, 180mm

REAR ROTOR
Shimano, 160mm

FRONT HUB
Shimano, 32H, 9x100mm, QR (Quick Release)

REAR HUB
Shimano, 32H, 9x135mm, QR (Quick Release)

FRONT RIM
Moustache, asymmetric, alloy 6061E, welded, 32 holes, 27.5", internal width 23mm

REAR RIM
Moustache, asymmetric, alloy 6061E, welded, 32 holes, 27.5", internal width 23mm

WHEELS
Schwalbe, Smart Sam, 27.5x2.25

FRONT TYRE
Schwalbe, Smart Sam, 27.5x2.25

REAR TYRE
Schwalbe, Smart Sam, 27.5x2.25

HANDLEBAR
Moustache, ergonomic, alloy, 680mm, 25° backsweep

STEM
Moustache, alloy, adjustable, 90mm

HEADSET
FSA, No 57B

GRIPS
Ergonomic, dual-density

SADDLE
Selle Royal, Wave

SEATPOST
Moustache, alloy, 31.6mm, 350mm

SEATCLAMP
Moustache, alloy, 34.9mm

FRONT LIGHT
AXA, NXT, 30 lux, powered by main battery

REAR LIGHT
Spanninga, Presto2Guard, powered by main battery

LOCK
-

KICKSTAND
Moustache, adjustable

MUDGUARD
Moustache, alloy, double wall design, w/alloy stays

CARRIER
Moustache, alloy, removable QL3 lateral fixation, MIK HD platform

PEDALS
alloy platform with reflectors

SIZE
M

COLOR
Dark Blue matt

WEIGHT
25.9 kg

GVWR
135 kg

XROAD ES 2026

XR1OBM500260



WARRANTY

5 years frame and fork Moustache Bikes - 2 years motor, battery

Find this bike online

MOUSTACHE

XROAD ES 2026

XR1OBM500260



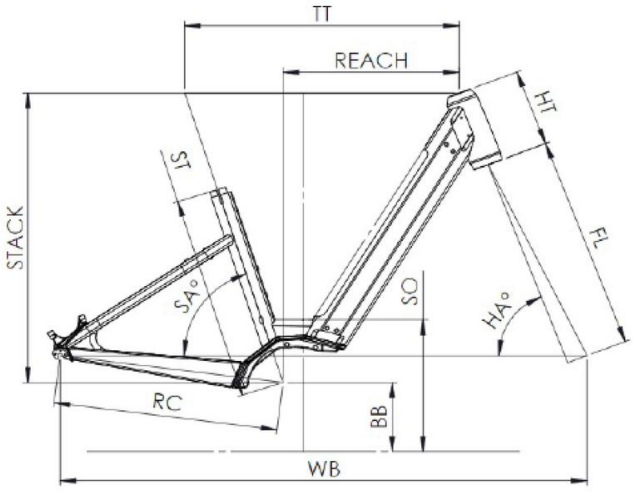

Xroad ES Open

ST - Taille / Size	mm	390 (S)	450 (M)	510 (L)
Taille utilisateur / User size	m	1,49 - 1,61	1,59 - 1,76	1,74 - 1,90
TT - Tube supérieur / Top tube	mm	555	580	605
RC - Bases / Rear center	mm	475	475	475
HT - Douille de direction / Headtube	mm	170	170	170
WB - Empattement / Wheelbase	mm	1109	1118	1143
FL - Longueur de fourche / Fork length	mm	487	487	487
BB - Hauteur de boitier / BB height	mm	298	298	298
SA - Angle de selle / Seat angle	°	71	71	71
HA - Angle de direction / Head angle	°	67,2	68	68
Reach	mm	336	360	385
Stack	mm	643	648	648
SO - Enjambement / Standover	mm	438	438	438

Find this bike online

MOUSTACHE