SAMEDI 28.4 2025

S84CRM600250



Product specifications may change without notice. Non-contractual information.

FRAME
Samedi 28, 6061 T4-T6 alloy, variable thickness hydroformed tubes, Bosch PowerTube battery integration (Vertical), integrated cable routing

FORK
SR Suntour, NEX-E25, HLO, preload adjustment & lockout function, 63mm travel

MOTOR
Bosch, Performance Line BDU33, Smart System, 75Nm

BATTERY
Bosch, PowerTube 625Wh, vertical, Smart System

REMOTE
Bosch, Purion 200, Smart System

CONDITIONS
Maximum distance, calculated for a 70kg rider in ideal conditions. Estimate your battery range .

CHARGER
Bosch, 4Ah

BCM
Not equipped with Bosch ConnectModule

RANGE AUTONOMY
156 km

REAR DERAILLEUR
Shimano, CUES, RD-U6020, 10-speed

CHAINRING
Narrow-Wide, 40 teeth

CASSETTE
Shimano, CUES, CS-LG300 10-speed, 11-39T

CHAIN
Shimano, LG500, 120 links

SHIFTER
Shimano, CUES, SL-U6000-10R, 10-speed

CRANKS
Moustache, aluminium, 170mm moteur Gen3

FRONT BRAKE
Shimano, MT200 or Alhonga HJ-472, hydraulic disc brake

REAR BRAKE
Shimano, MT200 or Alhonga HJ-472, hydraulic disc brake

FRONT ROTOR
Shimano, 180mm or Alhonga, 180mm

REAR ROTOR
Shimano, 160mm or Alhonga, 160mm

FRONT HUB
Shimano, 32H, 9x100mm, QR (Quick Release)

REAR HUB
Shimano, 32H, 9x135mm, QR (Quick Release)

FRONT RIM
Moustache, asymmetric, alloy 6061E, welded, 32 holes, 28", internal width 23mm

REAR RIM
Moustache, asymmetric, alloy 6061E, welded, 32 holes, 28", internal width 23mm

WHEELS
Schwalbe, Big Apple, 700x50C

FRONT TYRE
Schwalbe, Big Apple, 700x50C

REAR TYRE
Schwalbe, Big Apple, 700x50C

HANDLEBAR
Moustache, ergonomic, alloy, 80mm rise

STEM
Moustache, alloy, adjustable, 90mm

HEADSET
FSA, No 57B-1

GRIPS
Ergonomic, dual-density

SADDLE
Selle Royal, Essenza + moderate

SEATPOST
Suspension, alloy, 31.6mm, 350mm, 40mm travel

SEATCLAMP
Moustache, alloy, 34.9mm

FRONT LIGHT
AXA, NXT, 30 lux, powered by main battery

REAR LIGHT
Spanninga, Presto2Guard, powered by main battery

LOCK
AXA, Block XXL, same key for framelock & battery lock

KICKSTAND
Moustache, adjustable

MUDGUARD
Moustache, alloy, double wall design, w/alloy stays

CARRIER
Moustache, alloy, removable QL3 lateral fixation, MIK HD platform

PEDALS
alloy platform with reflectors

SIZE
M

COLOR
Metalic red glossy

WEIGHT
27.2 kg

SAMEDI 28.4 2025

S84CRM600250



GVWR

135 kg

WARRANTY

5 years frame and fork Moustache Bikes - 2 years motor, battery

Find this bike online

MOUSTACHE

SAMEDI 28.4
2025

S84CRM600250



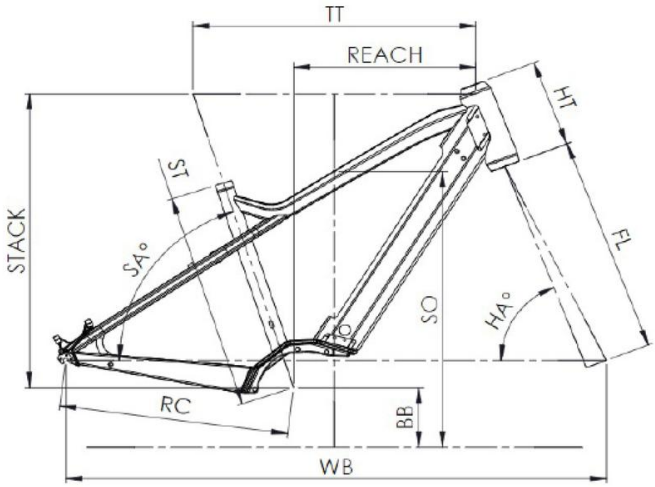

Samedi 28 ES / 28.4

ST - Taille / Size	mm	420 (S)	470 (M)	530 (L)	580 (XL)
Taille utilisateur / User size	m	1,55 - 1,70	1,68 - 1,83	1,80 - 1,95	1,90 - 2,05
TT - Tube supérieur / Top tube	mm	560	585	610	635
RC - Bases / Rear center	mm	475	475	475	475
HT - Douille de direction / Headtube	mm	170	170	170	190
WB - Empattement / Wheelbase	mm	1106	1121	1147	1173
FL - Longueur de fourche / Fork length	mm	477	477	477	477
BB - Hauteur de boitier / BB height	mm	305	305	305	305
SA - Angle de selle / Seat angle	°	71,5	71,5	71,5	71,5
HA - Angle de direction / Head angle	°	67,7	68,5	68,5	68,5
Reach	mm	347	371	396	415
Stack	mm	644	644	644	644
SO - Enjambement / Standover	mm	770	774	782	786

Find this bike online

MOUSTACHE