SAMEDI 27 OFF 2 2023

SA27CO253230



Product specifications may change without notice. Non-contractual information.

FRAME
Off 2, 6061 T4-T6 alloy, triple cavity hydroformed tubes of variable thickness, Exclusive integration for the Bosch PowerTube (vertical) battery, internal cable routing

FORK
SR Suntour, XCM ATB, preload adjustment, 100mm travel

MOTOR
Bosch, Performance Line BDU33, Smart System, 75Nm

BATTERY
Bosch, PowerTube 500Wh, vertical, Smart System

DISPLAY
Bosch, Intuvia 100, Smart System

REMOTE
Bosch, LED remote Bluetooth

CONDITIONS
Maximum distance, calculated for a 70kg rider in ideal conditions. Estimate your battery range .

CHARGER
Bosch, 4Ah

BCM
Not equipped with Bosch ConnectModule

RANGE AUTONOMY
98 km

REAR DERAILLEUR
Shimano, Deore, RD-M5120-SGS, 10-11-speed

CHAINRING
Narrow-Wide, 38 teeth, chainguard

CASSETTE
Sunrace, CSMS8, 11-speed, 11-46T

CHAIN
Sram, PC1110, 11-speed, 120 links

SHIFTER
Shimano, Deore, SL-M5100-R, 11-speed

CRANKS
Moustache, aluminium, 170mm moteur Gen3

FRONT BRAKE
Shimano, MT200 or Alhonga HJ-472, hydraulic disc brake

REAR BRAKE
Shimano, MT200 or Alhonga HJ-472, hydraulic disc brake

FRONT ROTOR
Shimano, 180mm or Alhonga, 180mm

REAR ROTOR
Shimano, 180mm or Alhonga, 180mm

FRONT HUB
Shimano, 32H, 9x100mm, QR (Quick Release)

REAR HUB
Shimano, 32H, 9x135mm, QR (Quick Release)

FRONT RIM
Moustache, asymmetric, alloy 6061E, welded, 32 holes, 27.5'', internal width 23mm

REAR RIM
Moustache, asymmetric, alloy 6061E, welded, 32 holes, 27.5'', internal width 23mm

WHEELS
Maxxis, Forekaster, 27.5x2.35

FRONT TYRE
Maxxis, Forekaster, 27.5x2.35

REAR TYRE
Maxxis, Forekaster, 27.5x2.35

HANDLEBAR
Moustache, alloy, 680mm, 15mm rise, 9° backsweep, 5° upsweep

STEM
Moustache, 3D forged Aluminum, 70mm

HEADSET
FSA, No 57B-1

GRIPS
Ergonomic, dual-density

SADDLE
Moustache, Comfort

SEATPOST
Suspension, alloy, 31.6mm, 350mm, 40mm travel

SEATCLAMP
Moustache, alloy, 34.9mm

FRONT LIGHT
-

PEDALS
Resin platform with reflectors

SIZE
L

COLOR
Metalic red glossy

WEIGHT
24.1 kg

GVWR
135 kg

WARRANTY
5 years frame and fork Moustache Bikes - 2 years motor, battery

Find this bike online

MOUSTACHE

SAMEDI 27
OFF 2 2023

SA27CO253230



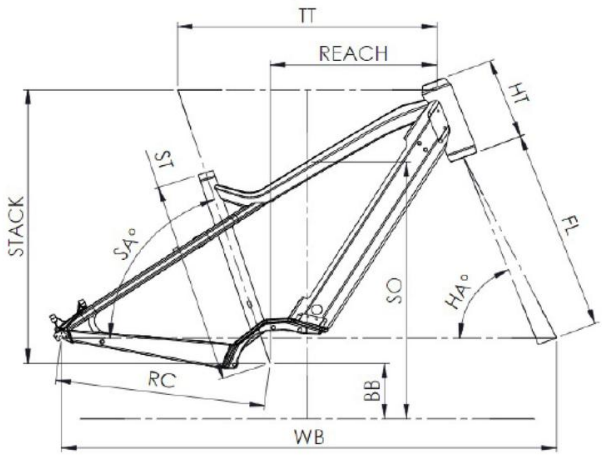

Off 2

ST - Taille / Size	mm	420 (S)	470 (M)	530 (L)	580 (XL)
Taille utilisateur / User size	m	1,55 - 1,70	1,68 - 1,83	1,80 - 1,95	1,90 - 2,05
TT - Tube supérieur / Top tube	mm	560	585	610	635
RC - Bases / Rear center	mm	475	475	475	475
HT - Douille de direction / Headtube	mm	170	170	170	190
WB - Empattement / Wheelbase	mm	1115	1130	1155	1182
FL - Longueur de fourche / Fork length	mm	507	507	507	507
BB - Hauteur de boitier / BB height	mm	313	313	313	313
SA - Angle de selle / Seat angle	°	70	70	70	70
HA - Angle de direction / Head angle	°	66,3	67	67	67
Reach	mm	330	354	380	400
Stack	mm	649	654	654	673
SO - Enjambement / Standover	mm	775	783	783	792

Find this bike online

MOUSTACHE