# LUNDI 27.6 2025

L76OBU500250



Product specifications may change without notice. Non-contractual information.

**FRAME**
Lundi 27 low step-over, 6061 T4-T6 alloy, hydroformed and extruded triple cavity tubes for optimal stiffness. Exclusive integration of the Bosch PowerTube battery (Vertical), integrated cable routing

**FORK**
Lundi, alloy w/integrated cable routing and custom front carrier attachments

**MOTOR**
Bosch, Performance Line BDU33, Smart System, 75Nm

**BATTERY**
Bosch, PowerTube 500Wh, vertical, Smart System

**DISPLAY**
Bosch, Kiox 300, Smart System

**REMOTE**
Bosch, LED remote Bluetooth

**CONDITIONS**
Maximum distance, calculated for a 70kg rider in ideal conditions.  Estimate your battery range .

**CHARGER**
Bosch, 2Ah

**BCM**
Not equipped with Bosch ConnectModule

**RANGE AUTONOMY**
115 km

**REAR DERAILLEUR**
Moustache, eccentric idler tensioner

**CHAINRING**
Gates, 50T

**CASSETTE**
Gates, 24T

**CHAIN**
Gates, CDX belt, clean, smooth and resistant

**SHIFTER**
Enviolo, PURE, rotating handle with visual indicator

**CRANKS**
Moustache, aluminium, 170mm moteur Gen3

**FRONT BRAKE**
Shimano, MT200, hydraulic disc

**REAR BRAKE**
Shimano, MT200, hydraulic disc

**FRONT ROTOR**
Shimano, 180mm

**REAR ROTOR**
Shimano, 160mm

**FRONT HUB**
Shimano, 32H, 9x100mm, QR (Quick Release)

**REAR HUB**
Enviolo, City 320%, 32H

**FRONT RIM**
Moustache, asymmetric, alloy 6061E, welded, 32 holes, 27.5'', internal width 23mm

**REAR RIM**
Moustache, asymmetric, alloy 6061E, welded, 32 holes, 27.5'', internal width 23mm

**WHEELS**
Schwalbe, Super Moto-X, 27.5x2.40, Reflective

**FRONT TYRE**
Schwalbe, Super Moto-X, 27.5x2.40

**REAR TYRE**
Schwalbe, Super Moto-X, 27.5x2.40

**HANDLEBAR**
Moustache, Lundi custom ergonomic, alloy

**HEADSET**
FSA, No 28/41 integrated

**GRIPS**
Ergonomic, dual-density

**SADDLE**
Selle Royal, Hertz, gel

**SEATPOST**
Suspension, alloy, 31.6mm, 350mm, 40mm travel

**SEATCLAMP**
Moustache, alloy, 34.9mm

**FRONT LIGHT**
Spanninga, integrated, 30 lux, powered by main battery

**REAR LIGHT**
Spanninga, Presto2Guard, powered by main battery

**LOCK**
AXA, Block XXL, same key for framelock & battery lock

**KICKSTAND**
Moustache, adjustable

**MUDGUARD**
Moustache, alloy, double wall design, w/alloy stays

**CARRIER**
Moustache, alloy, removable QL3 lateral fixation, MIK HD platform

**FRONT CARRIER**
Optional extra: Moustache, Alloy, compatible with MIK bags and accessories

**PEDALS**
alloy platform with reflectors

**SIZE**
TU

**COLOR**
Midnight blue matt

**WEIGHT**
27.6 kg

# LUNDI 27.6
# 2025

L76OBU500250



**GVWR**

150 kg

**WARRANTY**

5 years frame and fork Moustache Bikes - 2 years motor, battery

**Find this bike online**

MOUSTACHE

# LUNDI 27.6
# 2025

L76OBU500250



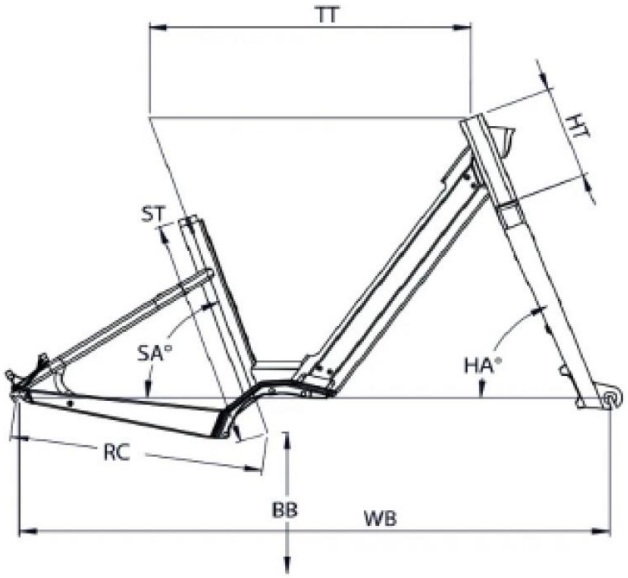


## Lundi 27 ES / 27.3 / 27.4

| ST - Taille / Size | mm | 460 |
|---|---|---|
| Taille utilisateur / User size | m | 1,57 - 1,90 |
| TT - Tube supérieur / Top tube | mm | 615 |
| RC - Bases / Rear center | mm | 480 |
| HT - Douille de direction / Headtube | mm | 185 |
| WB - Empattement / Wheelbase | mm | 1129 |
| BB - Hauteur de boitier / BB height | mm | 285 |
| SA - Angle de selle / Seat angle | ° | 70,4 |
| HA - Angle de direction / Head angle | ° | 69 |
| SO - Enjambement / Standover | mm | 427 |

**Find this bike online**

MOUSTACHE