# MARDI 27 ES

MA1ONL500270



Product specifications may change without notice. Non-contractual information.

**FRAME**
Mardi Open, 6061 T4-T6 alloy, hydroformed tubes and extruded triple cavity tubes for optimal stiffness, Bosch PowerTube battery integration, integrated cable routing

**FORK**
SR Suntour, XCM32-ATB, 100mm travel

**MOTOR**
Bosch, Active Line Plus BDU34, Smart System, 60 Nm

**BATTERY**
Bosch, PowerTube 540Wh

**REMOTE**
Bosch, Purion 200, Smart System

**CONDITIONS**
Maximum distance, calculated for a 70kg rider in ideal conditions.  Estimate your battery range .

**CHARGER**
Bosch, 2Ah

**BCM**
Not equipped with Bosch ConnectModule

**RANGE AUTONOMY**
124 km

**CHAINRING**
Gates, 46T

**CASSETTE**
Gates, 30T

**CHAIN**
Gates, CDX belt, clean, smooth and resistant

**SHIFTER**
Shimano, Nexus SL-C7000-5, 5-speed

**CRANKS**
Stronglight, aluminium, 170mm, ISI

**FRONT BRAKE**
Shimano, MT200, hydraulic disc

**REAR BRAKE**
Shimano, MT200, hydraulic disc

**FRONT ROTOR**
Shimano, 180mm

**REAR ROTOR**
Shimano, 160mm

**FRONT HUB**
Shimano, 32H, 9x100mm, QR (Quick Release)

**REAR HUB**
Shimano, Nexus, 32H, 263% gear range, 10x135mm, nut

**FRONT RIM**
Alloy , 32 holes, 27.5', internal width 23 mm

**REAR RIM**
Alloy , 32 holes, 27.5', internal width 23 mm

**WHEELS**
Schwalbe, Super Moto-X, 27.5x2.40, Reflective

**FRONT TYRE**
Schwalbe, Super Moto-X, 27.5x2.40, Reflective

**REAR TYRE**
Schwalbe, Super Moto-X, 27.5x2.40, Reflective

**HANDLEBAR**
Moustache, ergonomic, alloy, 660mm, 30° backsweep

**STEM**
Moustache, alloy, adjustable, 110mm

**HEADSET**
Acros, AZF-699, sealed bearings, internal routing, blocklock

**GRIPS**
SB3, Ergonomic

**SADDLE**
Selle Royal, Wave

**SEATPOST**
Moustache, alloy, 31.6mm, 350mm

**SEATCLAMP**
Moustache, alloy, 34.9mm

**FRONT LIGHT**
AXA, NXT, 30 lux, powered by main battery

**REAR LIGHT**
High-intensity LED integrated reflector, powered by main battery

**HORN**
Spanninga Minibell Black

**LOCK**
-

**KICKSTAND**
Moustache, adjustable

**MUDGUARD**
Moustache, alloy, double wall design, w/alloy stays

**CARRIER**
Moustache, alloy, removable QL3 lateral fixation, MIK HD platform. Moustache protect option.

**FRONT CARRIER**
PB-KITOP

**PEDALS**
alloy platform with reflectors

**SIZE**
L

**COLOR**
Black glossy

**WEIGHT**
28.1 kg

**GVWR**
135 kg

# MARDI 27 ES

MA1ONL500270



**WARRANTY**

5 years frame and fork Moustache Bikes - 2 years motor, battery

**Find this bike online**

MOUSTACHE

# MARDI 27 ES

MA1ONL500270



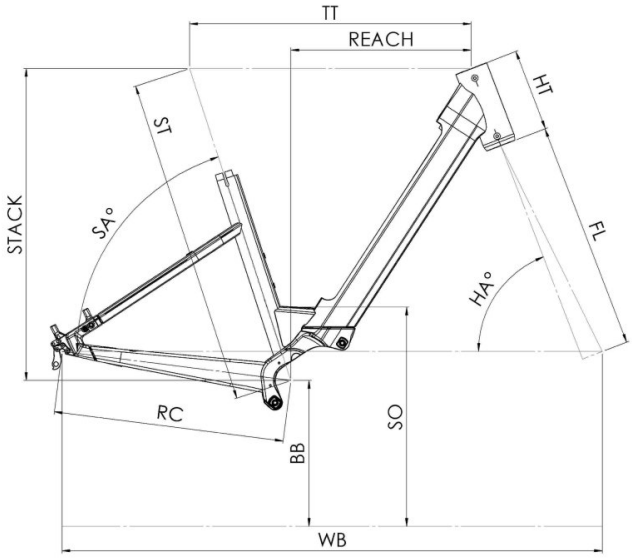


## Mardi 27 MY27

| ST - Taille / Size | mm | 390 (S) | 450 (M) | 510 (L) | 550 (XL) |
|---|---|---|---|---|---|
| Taille utilisateur / User size | m | 1,49 - 1,61 | 1,59 - 1,76 | 1,74 - 1,92 | 1,90 - 2,05 |
| TT - Tube supérieur / Top tube | mm | 557 | 580 | 610 | 645 |
| RC - Bases / Rear center | mm | 475 | 475 | 475 | 475 |
| HT - Douille de direction / Headtube | mm | 170 | 170 | 190 | 210 |
| WB - Empattement / Wheelbase | mm | 1112 | 1126 | 1157 | 1193 |
| FL - Longueur de fourche / Fork length | mm | 501,5 | 501,5 | 501,5 | 501,5 |
| BB - Hauteur de boitier / BB height | mm | 300 | 300 | 300 | 300 |
| SA - Angle de selle / Seat angle | ° | 71,3 | 71,3 | 71,3 | 71,3 |
| HA - Angle de direction / Head angle | ° | 66,6 | 67,4 | 67,4 | 67,4 |
| Reach | mm | 333 | 354 | 378 | 407 |
| Stack | mm | 661 | 666 | 684 | 702 |
| SO - Enjambement / Standover | mm | 140 | 140 | 140 | 140 |

**Find this bike online**

MOUSTACHE