# LUNDI 20
# CARGO 5

L05OGU5E0250



Product specifications may change without notice. Non-contractual information.

**FRAME**
Lundi 20 low step-over, 6061 T4-T6 alloy, hydroformed and extruded triple cavity tubes for optimal stiffness. Integrated cable routing. Optimal geometry for stable handling and great manoeuvrability.

**FORK**
SR Suntour Mobie 34 Suspension Fork, designed to withstand the forces of cargo use.
70mm travel with Lockout function. Boost spacing

**MOTOR**
Bosch, Cargo Line, Smart System, 85Nm

**BATTERY**
Bosch, PowerPack 545Wh, Smart System

**REMOTE**
Bosch, Purion 200, Smart System

**CONDITIONS**
Maximum distance, calculated for a 70kg rider with 70kg payload in ideal conditions.  Estimate your battery range .

**CHARGER**
Bosch, 2Ah

**RANGE AUTONOMY**
100 km

**CHAINRING**
Gates, 55T

**CASSETTE**
Gates, 22T

**CHAIN**
Gates, CDX belt, clean, smooth and resistant

**SHIFTER**
Enviolo, PRO, rotating handle with visual indicator

**CRANKS**
Moustache aluminium, 170 mm, compatible with Gen2 / Gen4 motor

**FRONT BRAKE**
Magura, MT4, hydraulic disc

**REAR BRAKE**
Magura, MT4, hydraulic disc

**FRONT ROTOR**
Magura, MDR-C, 203mm

**REAR ROTOR**
Magura, MDR-C, 180mm

**FRONT HUB**
Moustache, 32H, 15x110mm, thru axle

**REAR HUB**
Enviolo, HD 380%, 32H, 12x148mm, nut

**FRONT RIM**
Moustache, asymmetric, alloy 6061E, welded, 32 holes, 20", internal width 35mm

**REAR RIM**
Moustache, asymmetric, alloy 6061E, welded, 32 holes, 20", internal width 35mm

**WHEELS**
Schwalbe, Pick-Up, 20x2.35, Super Defense

**FRONT TYRE**
Schwalbe, Pick-Up, 20x2.35, Super Defense

**REAR TYRE**
Schwalbe, Pick-Up, 20x2.35, Super Defense

**HANDLEBAR**
Moustache, Lundi custom ergonomic, alloy

**HEADSET**
NO.55R/57SC

**GRIPS**
Ergonomic, dual-density

**SADDLE**
Selle Royal, Essenza Moderate Lady

**SEATPOST**
Limotec, A3, suspension + telescopic, aluminium diameter 34.9mm, 100mm amplitude, 40mm suspension, comfortable and safe.

**SEATCLAMP**
Moustache, alloy, 34.9mm

**FRONT LIGHT**
AXA, NXT, 30 lux, powered by main battery

**REAR LIGHT**
AXA, Duo Flat, increased brightness under deceleration, powered by main battery

**HORN**
Spanninga Minibell Black

**LOCK**
AXA Imenso

**KICKSTAND**
Moustache, central, wide support for better stability, Pedal activated

**MUDGUARD**
Front: Moustache, alloy, double wall design, w/alloy stays and mudflap / Rear: PP, 180° lateral protection

**CARRIER**
Moustache, alloy, exclusive longtail design w/ integrated footrests. Removable side fastenings for QL3 luggage. Platform with multiple MIK HD system to rapidly attach all compatible accessories, bags and child seats. Up to 70kg load capacity. ALBERT protection bar for children safety (recommended height between 110-140cm. Smaller children require adapted baby seats)

**FRONT CARRIER**
Moustache, alloy, compatible with MIK baskets and accessories

**PEDALS**
alloy platform with reflectors

**SIZE**
TU

# LUNDI 20
# CARGO 5

L05OGU5E0250



**COLOR**
Silk Grey

**WEIGHT**
32 kg

**GVWR**
200 kg

**WARRANTY**
5 years frame and fork Moustache Bikes - 2 years motor, battery

**Find this bike online**

MOUSTACHE

# LUNDI 20
# CARGO 5

L05OGU5E0250



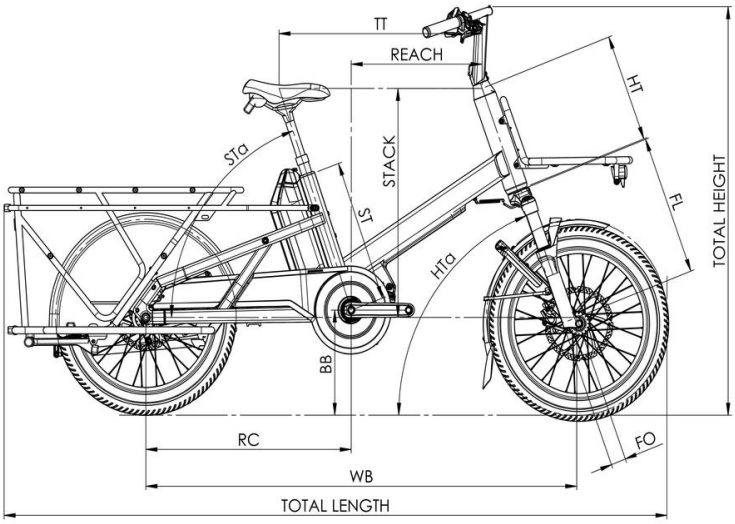


## Lundi 20 Cargo 3 / 5

| ST - Taille / Size | mm | 390 |
|---|---|---|
| Taille utilisateur / User size | m | 1,57 - 1,90 |
| TT - Tube supérieur / Top tube | mm | 603 |
| RC - Bases / Rear center | mm | 610 |
| HT - Douille de direction / Headtube | mm | 300 |
| WB - Empattement / Wheelbase | mm | 1272 |
| FL - Longueur de fourche / Fork length | mm | 402 |
| BB - Hauteur de boitier / BB height | mm | 288 |
| SA - Angle de selle / Seat angle | ° | 70,5 |
| HA - Angle de direction / Head angle | ° | 69,5 |
| Reach | mm | 382 |
| Stack | mm | 622 |
| SO - Enjambement / Standover | mm | 530 |
| Longueur totale / Total length | mm | 1968 |
| Hauteur totale / Total heigh | mm | 1116 |

**Find this bike online**

MOUSTACHE