XROAD 6

XR6OVM800270



Product specifications may change without notice. Non-contractual information.

FRAME
Xroad Open, 6061 T4-T6 alloy, hydroformed tubes and extruded triple cavity tubes for optimal stiffness, Bosch PowerTube battery integration, integrated cable routing

FORK
SR Suntour, XCR 34, lockout function, 120mm travel

MOTOR
Bosch, Performance Line CX BDU38, Smart System, 120 Nm

BATTERY
Bosch, PowerTube 800Wh, Smart System

DISPLAY
Bosch, Kiox 500, Smart System

REMOTE
Bosch, LED remote Bluetooth

CONDITIONS
Maximum distance, calculated for a 70kg rider in ideal conditions. Estimate your battery range .

CHARGER
Bosch, 4Ah

BCM
Not equipped with Bosch ConnectModule

RANGE AUTONOMY
167 km

REAR DERAILLEUR
Shimano, CUES, RD-U6000-GS, 10/11-speed

CHAINRING
Narrow-Wide, 38 teeth

CASSETTE
Shimano, CUES, CS-LG400 11-speed, 11-50T

CHAIN
Shimano, LG500, 108 links

SHIFTER
Shimano, CUES, SL-U6000-11R, 11-speed

CRANKS
Stronglight, aluminium, 170mm, ISI

FRONT BRAKE
Magura, Louise Elite Leisure, hydraulic disc, 4 pistons

REAR BRAKE
Magura, Louise Elite Leisure, hydraulic disc, 4 pistons

FRONT ROTOR
Magura, MDR-C, 180mm

REAR ROTOR
Magura, MDR-C, 180mm

FRONT HUB
Shimano, 32H, 15x110mm, thru axle

REAR HUB
Shimano, 32H, 9x135mm, QR (Quick Release)

FRONT RIM
Alloy , 32 holes, 27.5', internal width 27 mm

REAR RIM
Alloy , 32 holes, 27.5', internal width 27 mm

WHEELS
Schwalbe, Smart Sam, 27.5x2.35, reflective

FRONT TYRE
Schwalbe, Smart Sam, 27.5x2.35, reflective

REAR TYRE
Schwalbe, Smart Sam, 27.5x2.35, reflective

HANDLEBAR
Moustache, ergonomic, alloy, 660mm, 30° backsweep

STEM
Moustache, alloy, adjustable, 90mm

HEADSET
Acros, AZF-699, sealed bearings, internal routing, blocklock

GRIPS
SB3, Ergonomic

SADDLE
Selle Royal, Essenza + moderate

SEATPOST
EXA, 860i, suspension dropper-post w/remote lever, 31.6mm, 125mm

SEATCLAMP
Moustache, alloy, 34.9mm

FRONT LIGHT
AXA, NXT, 80 lux, powered by main battery

REAR LIGHT
High-intensity LED integrated reflector, powered by main battery

HORN
Spanninga Minibell Black

LOCK
ABUS, 6950ML, same key for framelock & battery lock. One-Key option.

KICKSTAND
Moustache, adjustable

MUDGUARD
Moustache, alloy, double wall design, w/alloy stays

CARRIER
Moustache, alloy, removable QL3 lateral fixation, MIK HD platform. Moustache protect option.

FRONT CARRIER
PB-KITOP

PEDALS
alloy platform with reflectors

XROAD 6

XR6OVM800270



SIZE
M

COLOR
Oak green metalic

WEIGHT
27.1 kg

GVWR
160 kg

WARRANTY
5 years frame and fork Moustache Bikes - 2 years motor, battery

Find this bike online

MOUSTACHE

XROAD 6

XR6OVM800270



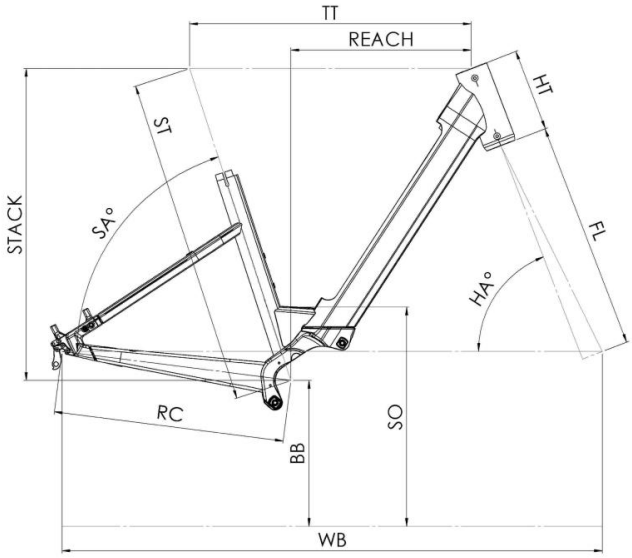

Xroad 2 / 4 / 6 / 4 800Wh / 6 800Wh Open

ST - Taille / Size	mm	390 (S)	450 (M)	510 (L)	550 (XL)
Taille utilisateur / User size	m	1,49 - 1,61	1,59 - 1,76	1,74 - 1,92	1,90 - 2,05
TT - Tube supérieur / Top tube	mm	557	580	610	645
RC - Bases / Rear center	mm	475	475	475	475
HT - Douille de direction / Headtube	mm	170	170	190	210
WB - Empattement / Wheelbase	mm	1122	1134	1166	1202
FL - Longueur de fourche / Fork length	mm	527,5	527,5	527,5	527,5
BB - Hauteur de boitier / BB height	mm	300	300	300	300
SA - Angle de selle / Seat angle	°	70,8	70,8	70,8	70,8
HA - Angle de direction / Head angle	°	65,3	66,2	66,2	66,2
Reach	mm	320,0	342,0	365,0	394,0
Stack	mm	677	682	701	720
SO - Enjambement / Standover	mm	140	140	140	140

Find this bike online

MOUSTACHE